TABLE OF CONTENTS

THIS PAGE INTENTIONALLY LEFT BLANK

1. As-Built Drawing List

1.1 Introduction

This section contains the mechanical and electrical drawings required to operate the system, equipment, and components of the Diesel engine generator set manufactured by Stewart & Stevenson.

1.2 Drawing List

The following table is a list of the drawings contained in this section. These drawings are correct and are the latest as-built revisions at the time of publication. Updated drawings will be sent as revisions as determined necessary by Stewart & Stevenson.

Drawing Number	Revision	Title or Description
26110754	A	Assembly, DM3580EG7-T2 Generator Set
26110755	A	Assembly, Skid, Engine, Generator, DM2580EG7C-T2
26110756	–	Air Start System, DM3580E with Outlet for Air Driven Motors
26110757	A	Assembly, Intake Air System, DM3580EG7C-T2
26110758	C	Installation, Exhaust System, DM3580E Generator
26110759	A	Cooling System, DM3580EG7C-T2, Generator Set
26110760	–	Installation and Assembly, Lube Oil System
26110761	–	Installation, Fuel System, DM3580E Generator Set
26110762	–	Installation, Electrical and Mechanical Instrumentation, DM3580EG7C-T2
26110888	C	General Arrangement and Installation Drawing, DM3580EG7C-T2 Generator Set
26110889	B	Schematic, Air Start System, DM3580EG7C-T2 Generator Set
26110890	A	Schematic, Intake Air, Exhaust Systems, DM3580EG7C-T2 Generator Set
26110892	A	Schematic, Cooling System, DM3580E Generator Set
26110893	B	Schematic, Engine Lube Oil System, DM3580EG7C-T2

Drawing Number	Revision	Title or Description
26110894	–	Schematic, Fuel Oil System, DM3580EG7C-T2
26110895	A	Schematic, Generator Bearing Lubrication System, DM3580EG7C-T2
26111179	F	Assembly & Wiring Engine Controller
26111180	E	System Interconnection WD
26111181	E	Schematic, Engine/Generator Controls and Monitoring
27101001	B	Generator Bearing Lube Oil System, Installation
27101007	C	Lube Oil System, Installation
27102906	–	Schematic, Generator Cooling Testline Setup, DM3580EG7C-T2
27106483	–	Lifting Rig Suggestion for DM3580EG7C-T2 Generator Set
ES-749	–	Factory Test Procedures, DM3580EG7C-T2
ES-750	–	Start-Up Procedures for Marine Drilling Units
ES-790	–	Fastener Torque Specification Table

REVISION HISTORY

REV	DESCRIPTION	DESIGNER	CHECKED BY	ENGINEER	APP. DATE
A	INITIAL RELEASE PER ECO-001475	I. BOERU	B. RAMIREZ	M. AALY	6/26/2009
A	UPDATED PER ECO-001538	I. BOERU	M. AALY	M. AALY	7/10/2009

NOTES:

1. APPLICABLE STANDARDS/SPECIFICATIONS:
   A. ASME Y 14.5M-1994
2. REFER TO SHIPLOOSE LIST DRAWING 26110764 FOR ITEMS THAT WILL BE SHIPPED TO CUSTOMER UNATTACHED.

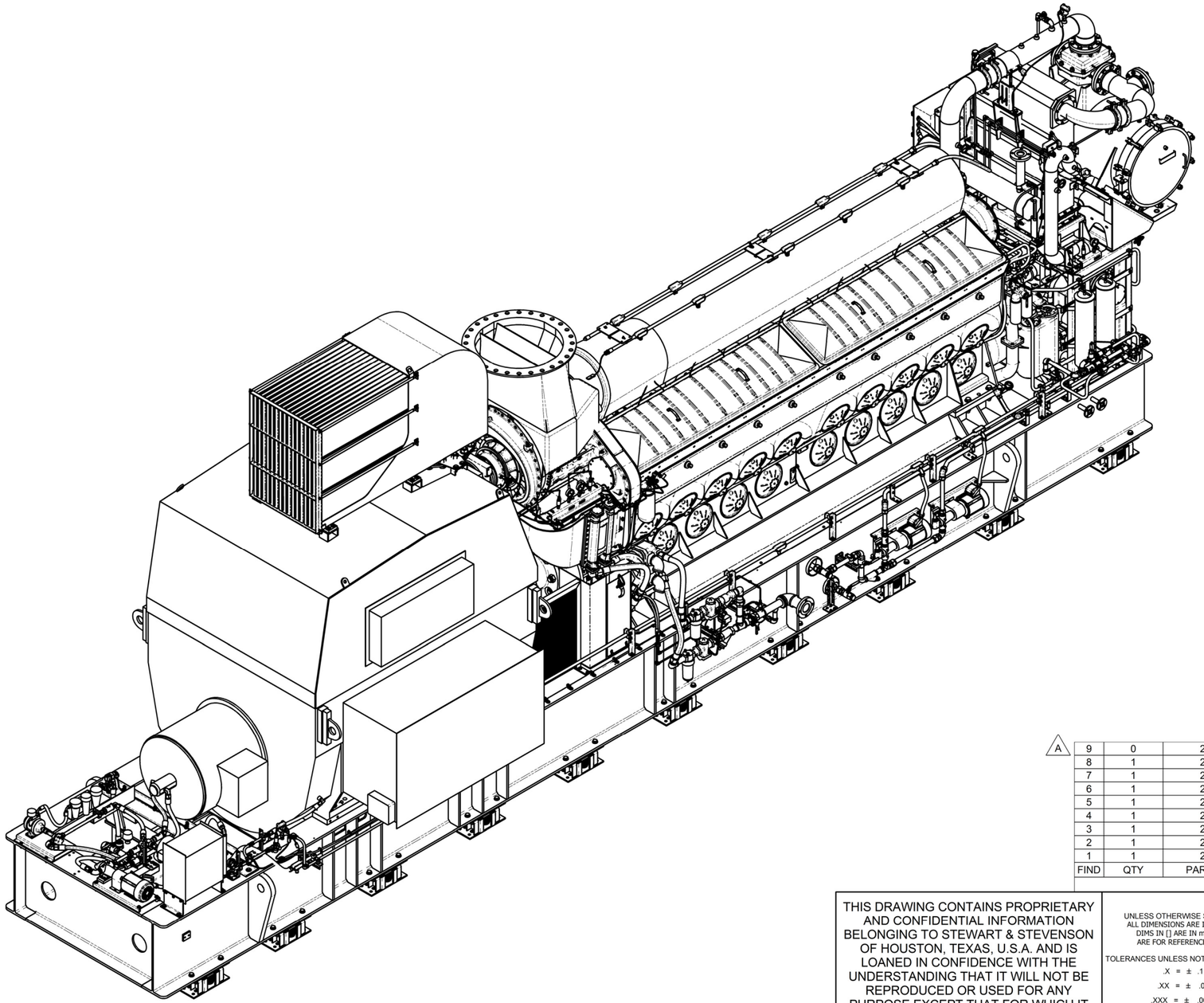

FIND	QTY	PART NUMBER	TITLE
9	0	27102847	REFERENCE DRAWING LIST
8	1	26110762	INSTALLATION, ELECTRICAL & MECHANICAL INSTRUMENTATION, NOBLE
7	1	26110761	FUEL SYSTEM
6	1	26110760	LUBE OIL SYSTEM, INSTALLATION AND ASSEMBLY DRAWING
5	1	26110759	COOLING SYSTEM, DM3580EG7C-T2 Gen Set
4	1	26110758	EXHAUST SYSTEM INSTALLATION, DM3580E GENERATOR
3	1	26110757	INTAKE AIR SYSTEM ASSEMBLY, DM3580EG7C-T2
2	1	26110756	AIR START SYSTEM, DM3580E WITH OUTLET FOR AIR DRIVEN MOTORS
1	1	26110755	SKID, ENGINE, GENERATOR, ASSEMBLY, DM3580EG7C-T2

PARTS LIST

UNLESS OTHERWISE SPECIFIED ALL DIMENSIONS ARE IN INCHES. DIMS IN [] ARE IN mm, AND ARE FOR REFERENCE ONLY.

TOLERANCES UNLESS NOTED OTHERWISE
.X = ± .1
.XX = ± .06
.XXX = ± .005
ANGLES = ± .5°

DRAWN	I. BOERU	4/30/2009
CHECKED	B. RAMIREZ	6/26/2009
PROJ ENG	M. AALY	6/26/2009

THIRD ANGLE PROJECTION

STEWART & STEVENSON LLC

TITLE: DM3580EG7C-T2 GENERATOR SET TOP ASSEMBLY

A

SIZE	CAGE CODE	DWG NO	REV
D	81381	26110754	A

SCALE: NTS FILE: 26110754.idw SHEET 1 OF 2

RELEASED

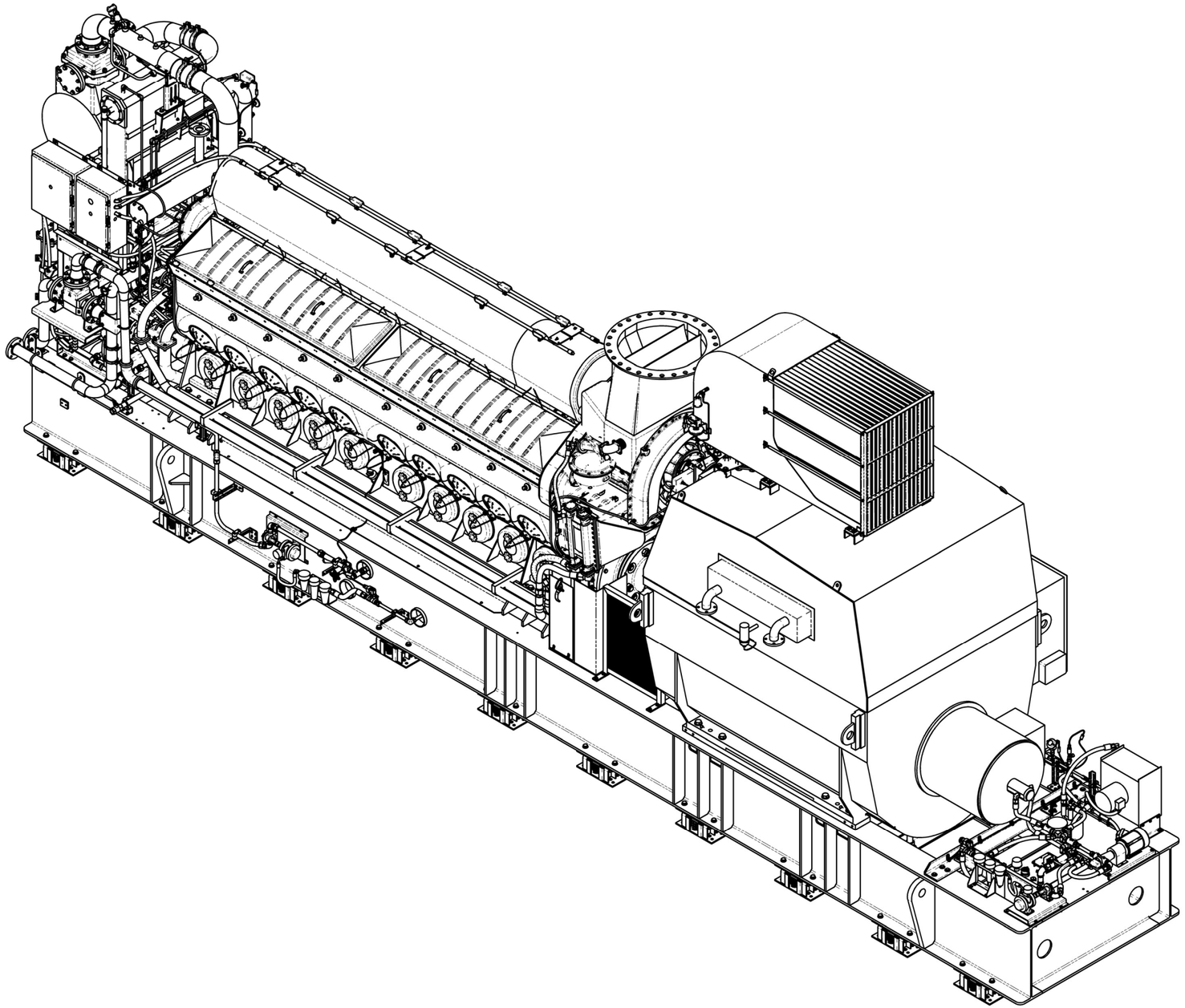

UNLESS OTHERWISE SPECIFIED
ALL DIMENSIONS ARE IN INCHES.
DIMS IN [] ARE IN mm, AND
ARE FOR REFERENCE ONLY.

TOLERANCES UNLESS NOTED OTHERWISE

.X = ± .1

.XX = ± .06

.XXX = ± .005

ANGLES = ± .5°

DRAWN	I. BOERU	4/30/2009
CHECKED	B. RAMIREZ	6/26/2009
PROJ ENG	M. AALY	6/26/2009

THIRD ANGLE PROJECTION

STEWART & STEVENSON LLC

TITLE

DM3580EG7C-T2 GENERATOR SET
TOP ASSEMBLY

SIZE	CAGE CODE	DWG NO	REV
D	81381	26110754	A

SCALE: NTS FILE: 26110754.idw SHEET 2 OF 2

RELEASED

C:\Vault Work\Product Data\Generators\Projects\SO 6098943 Noble Drilling Segerius (60 Hz)\26110754 Top Level\26110755\26110755.idw

REVISION HISTORY					
REV	DESCRIPTION	DESIGNER	CHECKED BY	ENGINEER	APP. DATE
-	INITIAL RELEASE PER ECO-001099	I. BOERU	M. AALY	M. AALY	4/29/2009
A	REVISED PER ECO-003210	I. BOERU	B. RAMIREZ	M. AALY	3/1/2010

NOTES:

1. APPLICABLE STANDARDS/SPECIFICATIONS:
   A. ASME Y 14.5M-1994
2. UNLESS OTHERWISE NOTED:
   REFER TO S&S TORQUE SPECIFICATION ES-790 FOR FASTENER TORQUE VALUES. VERIFY FASTENER AS RECEIVED CONDITION PRIOR TO TORQUE APPLICATION. (A)
3. AFTER ENGINE, COUPLING AND GENERATOR ARE ALIGNED ENGINE IS TO BE PINNED TO BASE USING FIND 6 (DOWEL PINS), REAM 4 HOLES FOR PRECISION FIT.
4. FOR COUPLING TORQUE AND ALIGNMENT DATA SEE SHEET 3, ALSO SEE ES-666 ALIGNMENT PROCEDURE FOR 2-BEARING GEN SETS.
5. ALL DIMENSIONS ARE FOR REFERENCE ONLY
6. FINDS 23, 29 AND 34 ARE SHOWN FOR FASTENER SIZING AND ARE RESPONSIBILITY OF THE CUSTOMER.

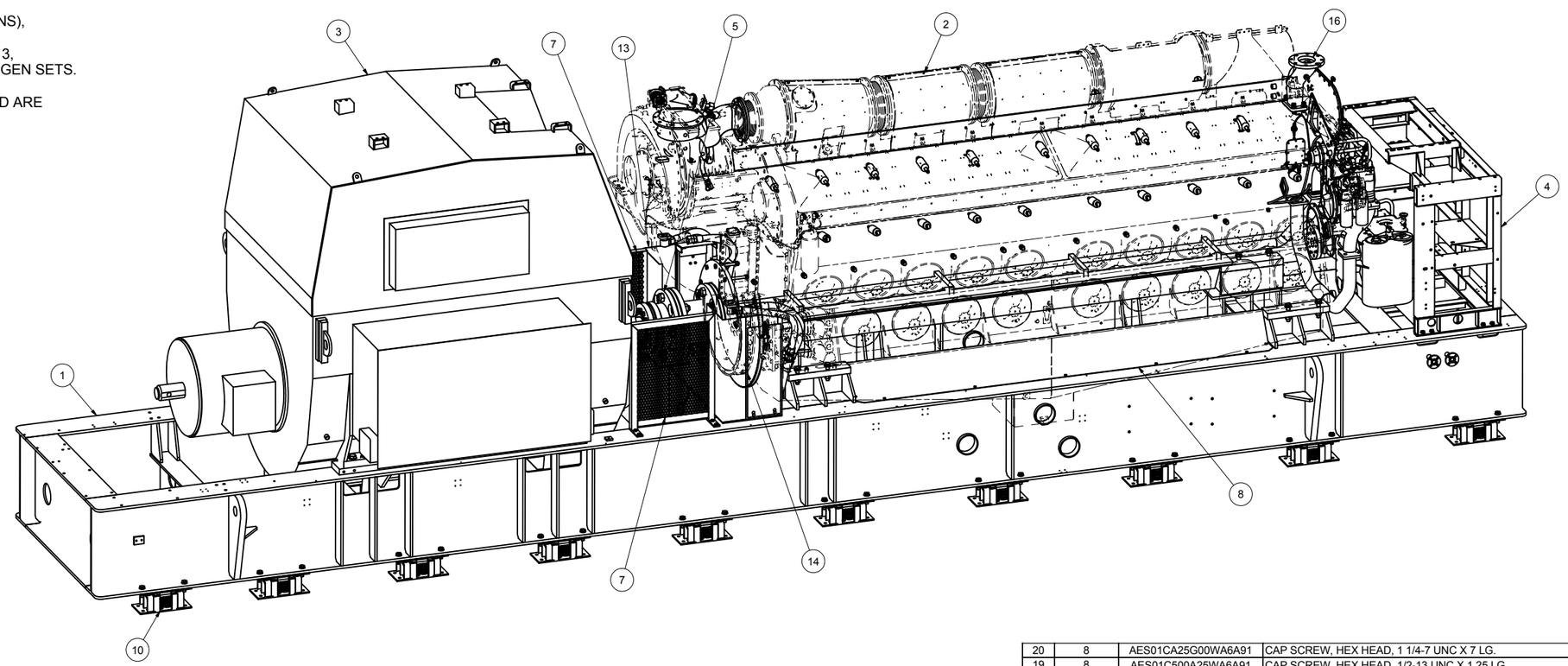

FIND	QTY	PART NUMBER	TITLE
34	REF 40	BM36788	NUT,HEX,LOCK, 7/8-9 UNC
33	8	BM36786	NUT,HEX,LOCK, 5/8-11 UNC
32	8	BM36789	NUT,HEX,LOCK, 1-8 UNC
31	8	BM36791	NUT,HEX,LOCK, 1 1/4-7 UNC
30	12	BM36802	NUT,HEX,LOCK, 3/4-16 UNF
29	REF 80	AEW24X87N000WB0A91	WASHER, PLAIN, 7/8 - NARROW - TYPE A
28	16	AEW24X62N000WB0A91	WASHER, PLAIN, 5/8 - NARROW - TYPE A
27	16	AEW24XA0N000WB0A91	WASHER, PLAIN, 1 - NARROW - TYPE A
26	14	AEW26X25R000WB0A91	WASHER, PLAIN, 1/4 - REGULAR - TYPE B
25	16	AEW24XA2N000WB0A91	WASHER, PLAIN, 1 1/4 - NARROW - TYPE A
24	8	AEW24X50N000WB0A91	WASHER, PLAIN, 1/2 - NARROW - TYPE A
23	REF 40	AES01C875B87WA6A91	CAP SCREW, HEX HEAD, 7/8-9 UNC X 3 LG.
22	8	AES01C625B25WA6A91	CAP SCREW, HEX HEAD, 5/8-11 UNC X 2.25 LG.
21	14	AES01C250A00WA6A91	CAP SCREW, HEX HEAD, 1/4-20 UNC X 1 LG.

PARTS LIST

FIND	QTY	PART NUMBER	TITLE
20	8	AES01CA25G00WA6A91	CAP SCREW, HEX HEAD, 1 1/4-7 UNC X 7 LG.
19	8	AES01C500A25WA6A91	CAP SCREW, HEX HEAD, 1/2-13 UNC X 1.25 LG.
18	12	AES01F750G50WA6A91	CAP SCREW, HEX HEAD, 3/4-16 UNF X 7.5 LG.
17	8	AES01CA00E00WA6A91	CAP SCREW, HEX HEAD, 1-8 UNC X 5 LG.
16	REF 1	40085325	ADAPTER,WATER OUTLET, 6" FF FLG
15	REF 4	103348	WASHER, 1" SAE NARROW, HARDENED
14	REF 1	8361632	EMD GUARD ASSY, FLYWHEEL, RH UNPUBLI - NON RETURNABLE
13	REF 1	8361631	EMD GUARD ASSY. FLYWHEEL, LH UNPUBLIS - NON RETURNABLE
12	REF 1	9570676	GASKET, ADAPTER, WATER OUTLET
11	REF 4	272563	BOLT-1-14 UNF
10	REF 20	20060300	MOUNT,SPRING ISOLATOR, SER634,10K LB MAX LOAD,OFFSET
9	REF 4	24600019	PIN, DOWEL, 1" OD X 4" LG
8	2	26109293	COVER, BASE, DM3580E GENERATOR
7	2	27101636	COUPLING GUARD FENCE
6	4	24600011	DOWEL PIN, 1" OD X 2-1/4" LG.
5	1	20500129	COUPLING, ENGINE/GENERATOR
4	1	26110278	ACCESORY RACK, WELDMENT, DM3580M GENERATOR
3	1	23500065	GENERATOR
2	1	23500067	EMD ENGINE, ME20G7C, TIER 2
1	1	27100322	BASE, FABRICATION, DM3580EG7C-T2, GEN SET

PARTS LIST

UNLESS OTHERWISE SPECIFIED ALL DIMENSIONS ARE IN INCHES. DIMS IN [] ARE IN mm, AND ARE FOR REFERENCE ONLY.

TOLERANCES UNLESS NOTED OTHERWISE
.X = ± .1
.XX = ± .06
.XXX = ± .005
ANGLES = ± .5°

DRAWN	I. BOERU	4/29/2009
CHECKED	M. AALY	4/29/2009
PROJ ENG	M. AALY	4/29/2009

THIRD ANGLE PROJECTION

STEWART & STEVENSON LLC

TITLE: SKID, ENGINE, GENERATOR, ASSEMBLY, DM3580EG7C-T2

SIZE	CAGE CODE	DWG NO	REV
D	81381	26110755	A

SCALE: NTS FILE: 26110755.idw SHEET 1 OF 3

RELEASED

C:\Vault Work\Product Data\Generators\Projects\SO 6098943 Noble Drilling Segerius (60 Hz)\26110754 Top Level\26110755\26110755.idw

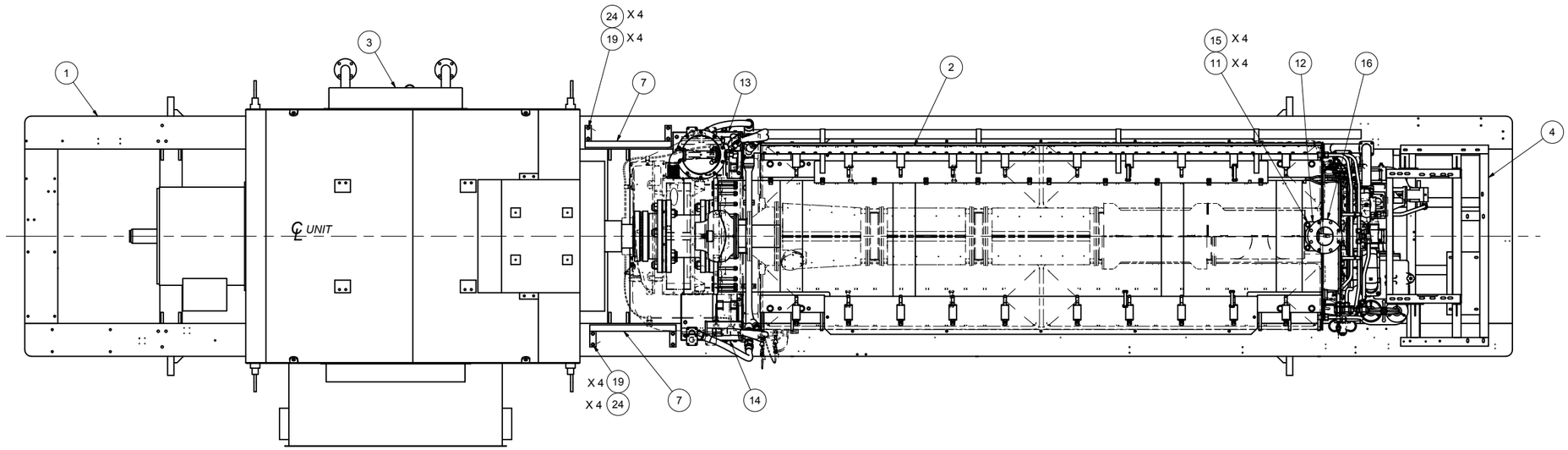

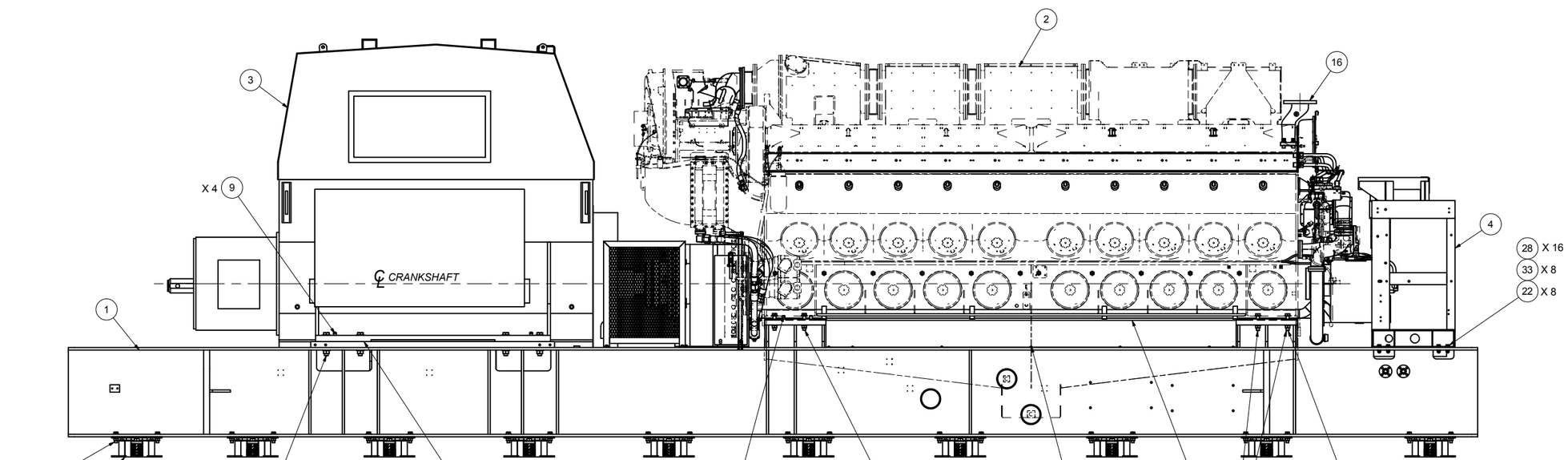

ADD ANY COMBINATION
THE FOLLOWING SHIMMING
MATERIAL:
27101692 (11 GA)
27101693 (16 GA)
27101694 (20 GA)
27101695 (24 GA)
FOR ALIGNMENT
(TYP BOTH SIDES)

TORQUE ENGINE FRONT MOUNTING
BOLTS:
1- ZINC PLATED / LUBRICATED TO 450 FT-LBS
2- CADMIUM PLATED / WAX COATED TO 300 FT-LBS
(TYP LEFT & RIGHT SIDES, FRONT ONLY)
A

STEWART & STEVENSON LLC

TITLE
SKID, ENGINE, GENERATOR,
ASSEMBLY, DM3580EG7C-T2

SIZE	CAGE CODE	DWG NO	REV
D	81381	26110755	A

SCALE: NTS | FILE: 26110755.idw | SHEET 2 OF 3

RELEASED

NOTES:

1. ROTATE ENGINE AND GENERATOR SIMULTANEOUSLY AND READ TIR OF DIAL INDICATORS
2. MAX RADIAL TIR IS 0.006"
   MAX ANGULAR TIR IS 0.005"
3. ALLOW FOR ENGINE VERTICAL THERMAL GROWTH
4. GENERIC ENGINE, COUPLING, AND GENERATOR ARE SHOWN FOR REFERENCE
5. REFERENCE ALIGNMENT PROCEDURE ES-666. (A)

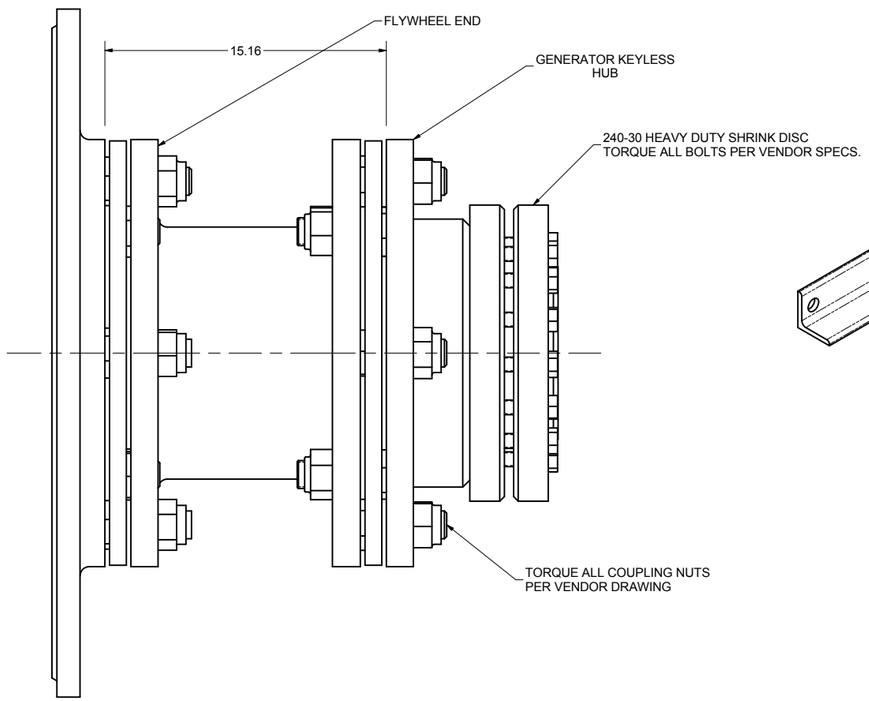

COUPLING TORQUE VALUES PER REXNORD DRAWING 70793 LATEST REV.

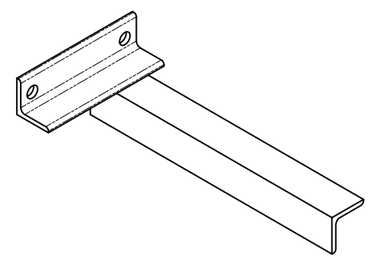

INDICATOR MOUNT

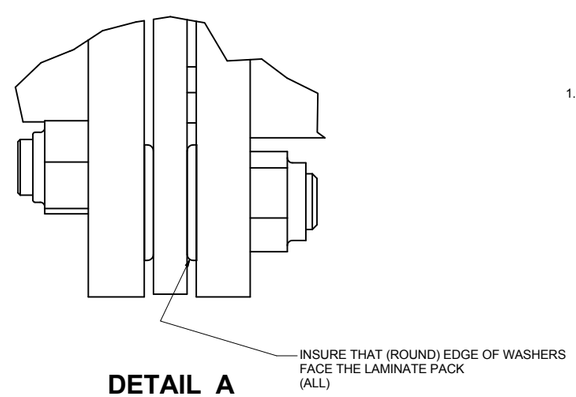

DETAIL A

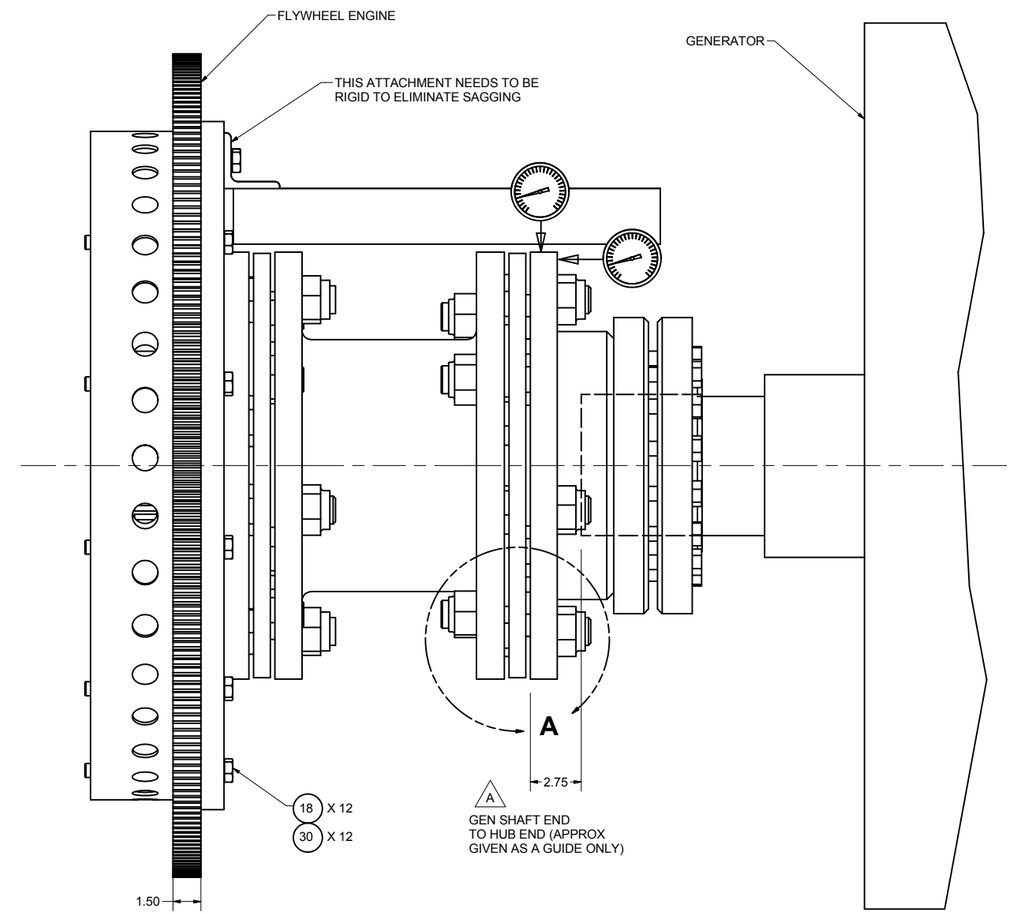

GENERIC COUPLING ALIGNMENT ASSEMBLY DIAL INDICATORS WITH MAGNET MOUNTS ON INDICATOR MOUNT

STEWART & STEVENSON LLC

TITLE: SKID, ENGINE, GENERATOR, ASSEMBLY, DM3580EG7C-T2

SIZE	CAGE CODE	DWG NO	REV
D	81381	26110755	A

SCALE: NTS | FILE: 26110755.idw | SHEET 3 OF 3

RELEASED

REVISION HISTORY

REV	DESCRIPTION	DESIGNER	CHECKED BY	ENGINEER	APP. DATE
-	INITIAL RELEASE PER ECO-001216	B. LUTZ	B. RAMIREZ	M. AALY	5/19/2009

NOTES:

1. APPLICABLE STANDARDS/SPECIFICATIONS:
   A. ASME Y 14.5M-1994
2. PART TO BE FREE OF BURRS AND SHARP CORNERS.

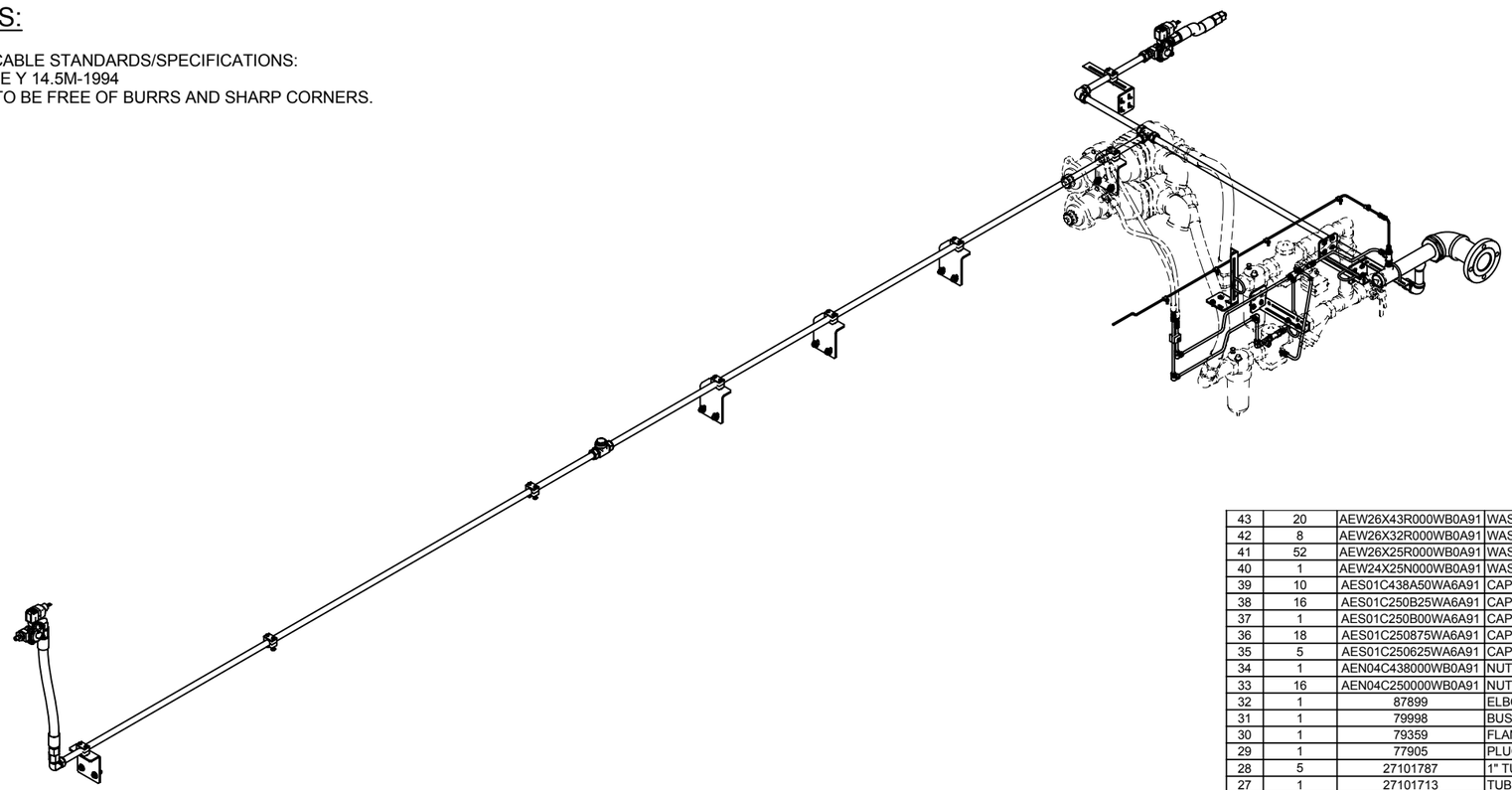

FIND	QTY	PART NUMBER	TITLE
66	1	22600187	SS SWAGELOK TUBE FITTING, MALE CONNECTOR, 1/4 IN. TUBE OD X 3/8 IN. MALE NPT
65	1	22602295	ADAPTER, HEX NIPPLE, 1/2" MNPT X 3/8" MNPT, SS
64	1	22602048	HYDRAULIC ADAPTER, (HEX NIPPLE), 1" MNPT X1/2" MNPT, SS
63	1	22602123	ADAPTER,90°,#16MJICX1"MNPT, SS
62	2	22000281	VALVE,SOLENOID,BRASS,1"NPT,PORTS,24VDC,2-WAY,N/C
61	1	22600179	ADAPTER,STR,#16MJICX1"MNPT, SS
60	3	SS-600-9	UNION ELBOW, 3/8"TUBE TO 3/8"
59	1	SS-600-3-6TMT	SS SWAGELOK TUBE FITTING, MALE RUN TEE, 3/8 IN. TUBE OD X 3/8 IN. MALE NPT X 3/8 IN. TUBE OD
58	1	SS-600-2-4	SS SWAGELOK TUBE FITTING, MALE ELBOW, 3/8 IN. TUBE OD X 1/4 IN. MALE NPT
57	2	SS-600-1-6	SS SWAGELOK TUBE FITTING, MALE CONNECTOR, 3/8 IN. TUBE OD X 3/8 IN. MALE NPT
56	3	SS-600-1-4	SS SWAGELOK TUBE FITTING, MALE CONNECTOR, 3/8 IN. TUBE OD X 1/4 MALE NPT
55	1	SS-4-T	STAINLESS STEEL PIPE FITTING, TEE, 1/4 IN. FEMALE NPT
54	1	SS-1610-9	SS SWAGELOK TUBE FITTING, UNION ELBOW, 1" TUBE OD
53	1	SS-1610-3	SS SWAGELOK TUBE FITTING, UNION TEE, 1 IN. TUBE OD
52	1	SS-1610-2-16	SS SWAGELOK TUBE FITTING, MALE ELBOW, 1" TUBE OD X 1" MALE NPT
51	2	SS-1610-1-16	SS SWAGELOK TUBE FITTING, MALE CONNECTOR, 1" Tube OD X 1" MALE NPT
50	1	SF0100L94	ELBOW,PIPE,THREADED,SS304,90DEG,150#,1"NPT
49	1	SF0006T6	TEE,PIPE,THREADED,SS304,150#,3/8"NPT
48	1	22602240	ADAPTER,STR,#16MJICX1/2"MNPT, SS
47	1	BM38765	UBOLT, 2" PIPE, 5/16-18 UNC X 2-1/2" ID X 3-3/16" LG
46	3	BM38764	UBOLT, 1-1/2" PIPE, 5/16-18 UNC X 2" ID X 2-11/16" LG
45	9	BM36783	NUT,HEX,LOCK, 7/16-14 UNC
44	8	BM36781	NUT,HEX,LOCK, 5/16-18 UNC

PARTS LIST

FIND	QTY	PART NUMBER	TITLE
43	20	AEW26X43R000WB0A91	WASHER, PLAIN, 7/16 - REGULAR - TYPE B
42	8	AEW26X32R000WB0A91	WASHER, PLAIN, 5/16 - REGULAR - TYPE B
41	52	AEW26X25R000WB0A91	WASHER, PLAIN, 1/4 - REGULAR - TYPE B
40	1	AEW24X25N000WB0A91	WASHER, PLAIN, 1/4 - NARROW - TYPE A
39	10	AES01C438A50WA6A91	CAP SCREW, HEX HEAD, 7/16-14 UNC X 1.5 LG.
38	16	AES01C250B25WA6A91	CAP SCREW, HEX HEAD, 1/4-20 UNC X 2.25 LG.
37	1	AES01C250B00WA6A91	CAP SCREW, HEX HEAD, 1/4-20 UNC X 2 LG.
36	18	AES01C250875WA6A91	CAP SCREW, HEX HEAD, 1/4-20 UNC X 0.875 LG.
35	5	AES01C250625WA6A91	CAP SCREW, HEX HEAD, 1/4-20 UNC X 0.625 LG.
34	1	AEN04C438000WB0A91	NUT, HEX, 7/16-14 UNC
33	16	AEN04C250000WB0A91	NUT, HEX, 1/4-20 UNC
32	1	87899	ELBOW,PIPE,THREADED,STL,90DEG,150#,3"NPT
31	1	79998	BUSHING,PIPE,STL,6000#,3"NPTM X 2"NPTF
30	1	79359	FLANGE, THREADED, RF, 150#, STL, 3"
29	1	77905	PLUG,PIPE,HEXHEAD,SS304,3000#,1"NPT
28	5	27101787	1" TUBE SUPPORT BRACKET
27	1	27101713	TUBING, AIR START
26	1	27101712	TUBING, AIR START, AIR VALVES COMMON PILOT LINE
25	1	27101711	TUBING, AIR START, AIR VALVES COMMON PILOT LINE
24	1	27102008	TUBE, RND, SS, 1" OD, .065" WALL X 16.06" LONG
23	1	27101688	TUBE, RND, SS, 1/4" OD, .035" WALL, 61.75" LONG
22	1	27101687	TUBE, RND, SS, 1/4" OD, .035" WALL, 6.73" LONG
21	1	27101678	TUBING, AIR START, INLET TO SOLENOID
20	1	27101677	TUBING, AIR START, AIR VALVE PILOT LINE
19	1	27101672	DISTRIBUTION MANIFOLD, AIR START
18	1	27101334	TUBE, RND, SS, 1" OD, .065" WALL X 14.56" LONG
17	2	27101333	TUBE, RND, SS, 1" OD, .065" WALL
16	1	27101332	TUBE, RND, SS, 1" OD, .065" WALL
15	1	26105108	PIPE, INLET, FLANGE TO ELBOW
14	1	26105074	TUBING, AIR START, AIR VAVLES COMMON PILOT LINE #1
13	1	26105073	TUBING, AIR START, LOWER AIR VALVE PILOT LINE
12	1	26105070	TUBING, AIR START, SOLENOID VALVE OUTLET
11	5	26102559	WELDMENT, SUPPORT, PIPE, UNIVERSAL, DM3865E GENERATOR
10	1	24600062	SWAGELOK TUBE SUPPORT, DOUBLE, 3/8"
9	5	24600057	P-SUPPORT, SWAGELOK, 1/4" OR 6mm TUBING
8	8	24600050	SUPPORT, 1" TUBE, SWAGELOK P/N 304-S3-PP-16T
7	1	22602031	ADAPTER,STR,#16MJICX1"FNPT, SS
6	1	22600183	SS SWAGELOK TUBE FITTING, FEMALE BRANCH TEE, 1 IN. TUBE OD X 1 IN. TUBE OD X 1 IN. FEMALE NPT
5	1	22600164	ADAPTER, UNION, 1/4" TUBE, SS
4	2	22600163	ADAPTER, 3/8" TUBE x 37 DEG. AN MALE, SS
3	1	22400639	HOSE, ASSEMBLY, FC234-#16JX-#16JX-24.00" LONG
2	1	22400638	HOSE, ASSEMBLY, FC234-#16JX-#16JX-16.50" LONG
1	1	21300042	NIPPLE,PIPE,TBE,SS304,SCH40,1"MNPT X 4-1/2"

PARTS LIST

UNLESS OTHERWISE SPECIFIED
ALL DIMENSIONS ARE IN INCHES.
DIMS IN [] ARE IN mm, AND
ARE FOR REFERENCE ONLY.

TOLERANCES UNLESS NOTED OTHERWISE
.X = ± .1
.XX = ± .06
.XXX = ± .005

ANGLES = ± .5°

DRAWN	B. LUTZ	3/3/2009
CHECKED	B. RAMIREZ	5/19/2009
PROJ ENG	M. AALY	5/19/2009

THIRD ANGLE PROJECTION

STEWART & STEVENSON LLC

TITLE
AIR START SYSTEM, DM3580E WITH OUTLET FOR AIR DRIVEN MOTORS

SIZE	CAGE CODE	DWG NO	REV
D	81381	26110756	-

SCALE: NTS FILE: 26110756.idw SHEET 1 OF 3

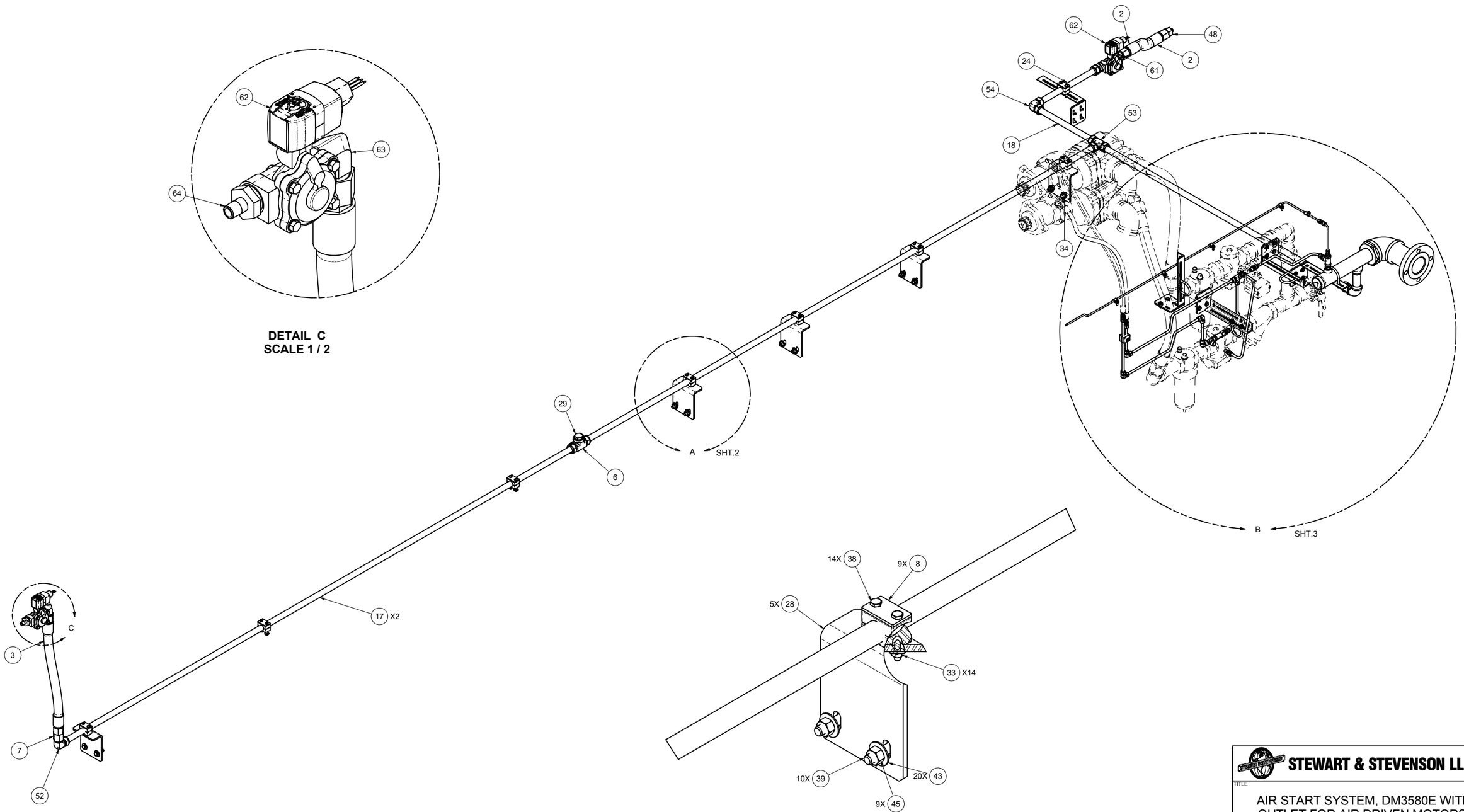

STEWART & STEVENSON LLC

TITLE
AIR START SYSTEM, DM3580E WITH OUTLET FOR AIR DRIVEN MOTORS

SIZE	CAGE CODE	DWG NO	REV
D	81381	26110756	-

SCALE: NTS FILE: 26110756.idw SHEET 2 OF 3

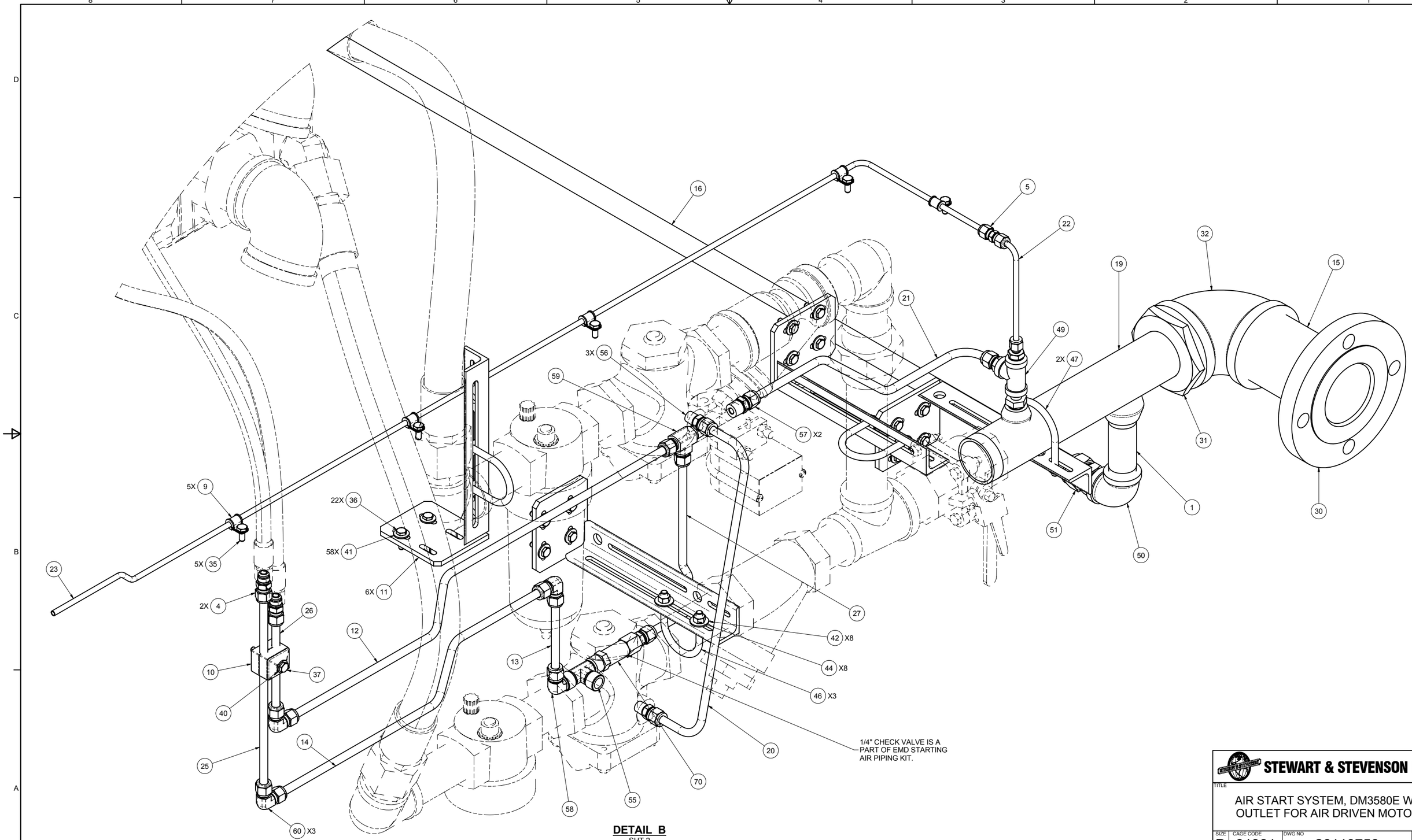

DETAIL B
SHT.2

STEWART & STEVENSON LLC

TITLE
AIR START SYSTEM, DM3580E WITH OUTLET FOR AIR DRIVEN MOTORS

SIZE	CAGE CODE	DWG NO	REV
D	81381	26110756	-

SCALE: NTS FILE: 26110756.idw SHEET 3 OF 3

REVISION HISTORY

REV	DESCRIPTION	DESIGNER	CHECKED BY	ENGINEER	APP. DATE
-	INITIAL RELEASE PER ECO-001071	B. LUTZ	B. RAMIREZ	M. AALY	5/2/2009
A	UPDATED PER ECO-001457	B. LUTZ	B. RAMIREZ	M. AALY	6/24/2009

NOTES:

1. APPLICABLE STANDARDS/SPECIFICATIONS:
   A. ASME Y 14.5M-1994
2. PART TO BE FREE OF BURRS AND SHARP CORNERS.

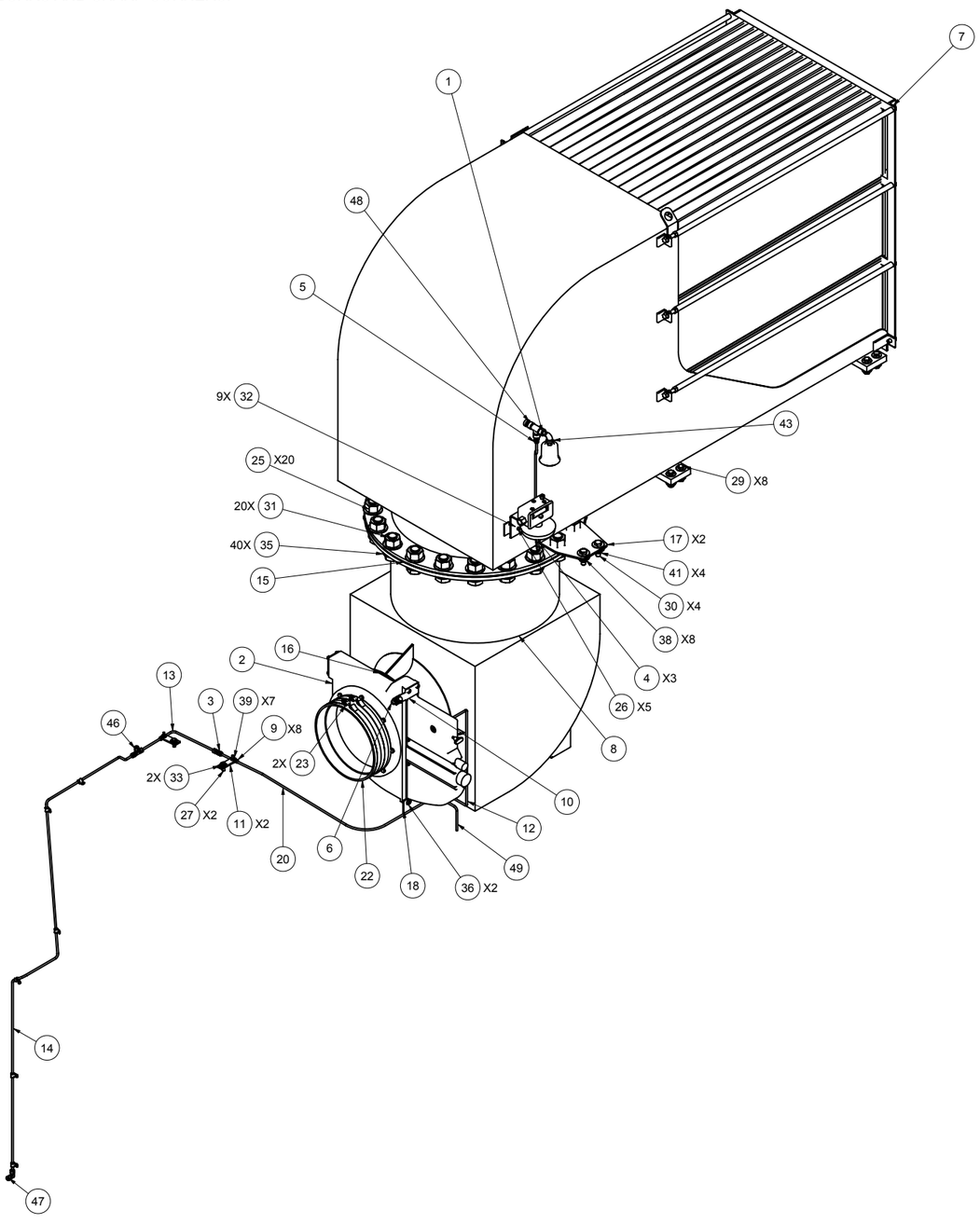

FIND	QTY	PART NUMBER	TITLE
49	1	26108714	TUBE, RND, SS, 1/4" OD, .035 WALL X 7.0" LONG
48	1	22602292	STAINLESS STEEL PIPE FITTING, HEX REDUCING NIPPLE, 3/8 IN. MALE NPT X 1/4 IN. MALE NPT
47	1	SS-400-9	SS SWAGELOK TUBE FITTING, UNION ELBOW, 1/4 IN. TUBE OD
46	1	SS-400-3	SS SWAGELOK TUBE FITTING, UNION TEE, 1/4 IN. TUBE OD
45	1	SS-400-2-4	SS SWAGELOK TUBE FITTING, MALE ELBOW, 1/4 IN. TUBE OD X 1/4 IN. MALE NPT
44	1	SS-400-1-2	SS SWAGELOK TUBE FITTING, MALE CONNECTOR, 1/4 IN. TUBE OD X 1/8 IN. MALE NPT
43	1	21600096	ELBOW,PIPE,STREET,BRASS,150#,90DEG,3/8"NPT
42	1	BM38754	UBOLT, 3/4" PIPE, 1/4-20 UNC X 9/16" ID X 1-1/4" LG
41	4	BM36786	NUT,HEX,LOCK, 5/8-11 UNC
40	8	BM36784	NUT,HEX,LOCK, 1/2-13 UNC
39	7	BM36780	NUT,HEX,LOCK, 1/4-20 UNC
38	8	AEW26X62R000WB0A91	WASHER, PLAIN, 5/8 - REGULAR - TYPE B
37	12	AEW26X43R000WB0A91	WASHER, PLAIN, 7/16 - REGULAR - TYPE B
36	2	AEW26X43N000WB0A91	WASHER, PLAIN, 7/16 - NARROW - TYPE B
35	40	AEW24XA3N000WB0A91	WASHER, PLAIN, 1 3/8 - NARROW - TYPE A
34	16	AEW24X50W000WB0A91	WASHER, PLAIN, 1/2 - WIDE - TYPE A
33	2	AEW24X37W000WB0A91	WASHER, PLAIN, 3/8 - WIDE - TYPE A
32	9	AEW24X25N000WB0A91	WASHER, PLAIN, 1/4 - NARROW - TYPE A
31	20	AES01CA37B87WA6A91	CAP SCREW, HEX HEAD, 1 3/8-6 UNC X 3 LG.
30	4	AES01C625B00WA6A91	CAP SCREW, HEX HEAD, 5/8-11 UNC X 2 LG.
29	8	AES01C500B25WA6A91	CAP SCREW, HEX HEAD, 1/2-13 UNC X 2.25 LG.
28	12	AES01C438A00WA6A91	CAP SCREW, HEX HEAD, 7/16-14 UNC X 1 LG.
27	2	AES01C375A00WA6A91	CAP SCREW, HEX HEAD, 3/8-16 UNC X 1 LG.
26	5	AES01C250A00WA6A91	CAP SCREW, HEX HEAD, 1/4-20 UNC X 1 LG.
25	20	AEN04CA37000WB0A91	NUT, HEX, 1 3/8-6 UNC
24	1	8320G182-24VDC	SOLENOID RIGSAVER, PNEUMATIC
23	2	40059004	T- BOLT CLAMP UNPUBLISHED - NON-RETURNABLE
22	1	40059003	DUCT, EMD
21	1	20060313	SWITCH, ALARM, HIGH VACUUM
20	1	27101521	TUBE, RND, SS, 1/4" OD, .035" WALL, 42" LONG
19	1	27101519	TUBE, 1/4" SS, AIR INTAKE SENSOR
18	1	27101515	SOLENOID MOUNTING BRACKET, 8320G SOLENOID RIGSAVER
17	2	27101506	SUPPORT BRACKET
16	1	27101485	GASKET, 16" OD X 11.75" ID, FOR AIR SHUT OFF VALVE
15	1	27101483	GASKET, FOR 24" FF FLANGE, 32" OD, 24" ID
14	1	27101523	TUBE, RND, SS, 1/4" OD, .035" WALL, 88" LONG
13	1	27101522	TUBE, RND, SS, 1/4" OD, .035" WALL, 16" LONG
12	1	27101520	TUBE, RND, SS, 1/4" OD, .035" WALL, 25.00" LONG
11	2	26106748	BRACKET, SUPPORT, CLAMP, TUBING
10	1	26100319	BRACKET,SENSOR,RIGSAVER
9	8	24600057	P-SUPPORT, SWAGELOK, 1/4" OR 6mm TUBING
8	1	23800067	TURNING BOX
7	1	23800066	AIR CLEANER ASSEMBLY, SPECIAL, DYNACELL TYPE WITH (15) RC300 ELEMENTS
6	1	22900002	PROXIMITY SENSOR
5	1	22600187	SS SWAGELOK TUBE FITTING, MALE CONNECTOR, 1/4 IN. TUBE OD X 3/8 IN. MALE NPT
4	3	22600165	ADAPTER, 1/4" TUBE X NPT MALE, SS
3	1	22600164	ADAPTER, UNION, 1/4" TUBE, SS
2	1	22000258	VALVE,"RIGSAVER",11.69"NOZZLE, PNEUMATIC TRIP
1	1	21500008	TEE, PIPE, 3/8" NPT, 150#, SS

PARTS LIST

UNLESS OTHERWISE SPECIFIED ALL DIMENSIONS ARE IN INCHES. DIMS IN [] ARE IN mm, AND ARE FOR REFERENCE ONLY.

TOLERANCES UNLESS NOTED OTHERWISE
.X = ± .1
.XX = ± .06
.XXX = ± .005
ANGLES = ± .5°

DRAWN	B. LUTZ	5/20/2009
CHECKED	B. RAMIREZ	5/2/2009
PROJ ENG	M. AALY	5/2/2009

THIRD ANGLE PROJECTION

STEWART & STEVENSON LLC

TITLE
INTAKE AIR SYSTEM ASSEMBLY, DM3580EG7C-T2

SIZE	CAGE CODE	DWG NO	REV
D	81381	26110757	A

SCALE: NTS FILE: 26110757.idw SHEET 1 OF 2

C:\Vault Work\Product Data\Generators\Projects\SO 6098943 Noble Drilling Segerius (60 Hz)\26110754 Top Level\26110757\26110757.idw

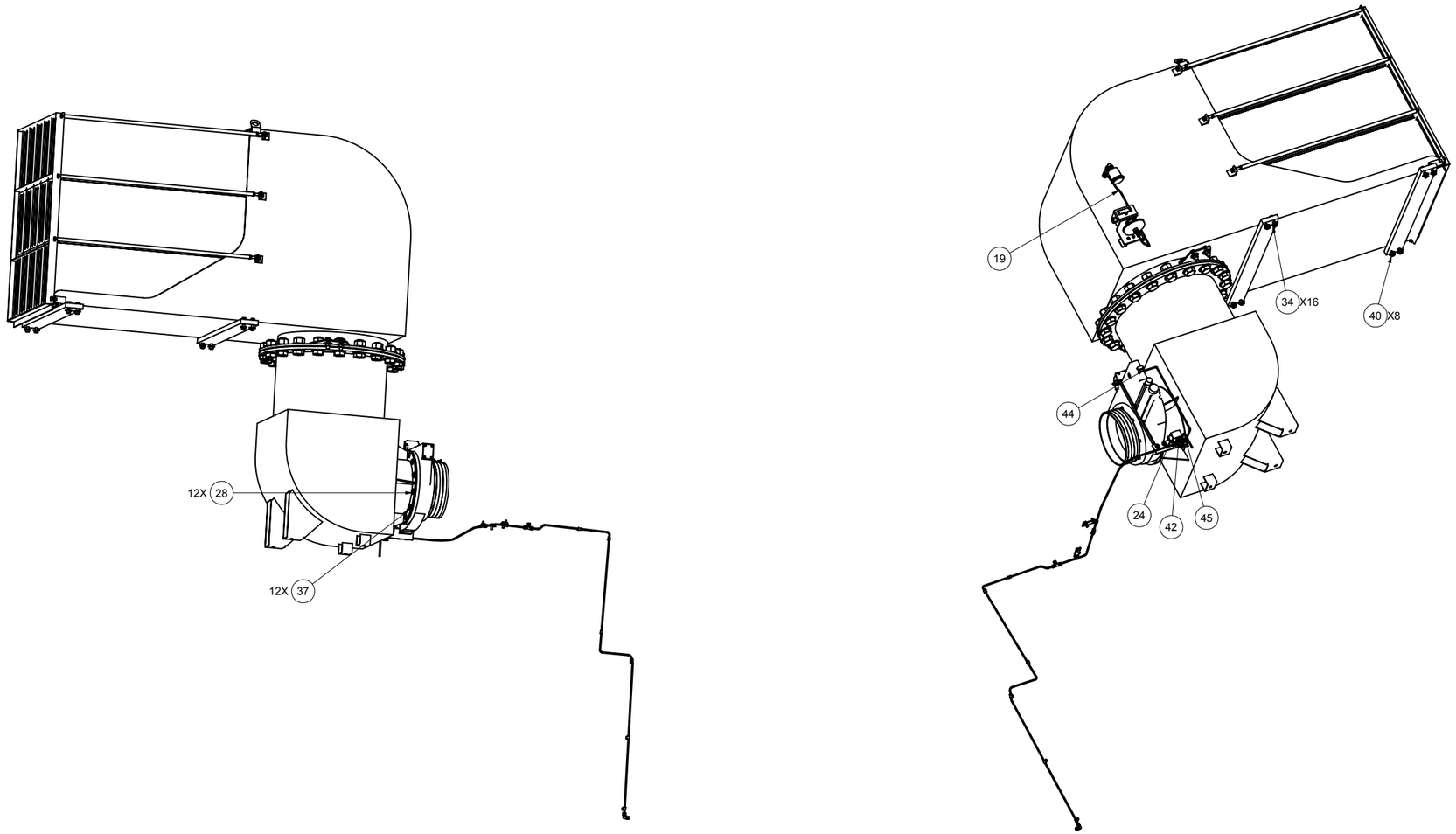

STEWART & STEVENSON LLC

TITLE

INTAKE AIR SYSTEM ASSEMBLY, DM3580EG7C-T2

SIZE	CAGE CODE	DWG NO	REV
D	81381	26110757	A

SCALE: NTS FILE: 26110757.idw SHEET 2 OF 2

REVISION HISTORY

REV	DESCRIPTION	DESIGNER	CHECKED BY	ENGINEER	APP. DATE
-	INITIAL RELEASE PER ECO-001122	B. LUTZ	M. AALY	M. AALY	05/04/2009
A	REVISED PER ECO-001557	BMR	M. AALY	M. AALY	07/09/2009
B	UPDATED QTY TO "EACH" PER ECO-002026	B. LUTZ	M. AALY	M. AALY	09/21/2009
C	UPDATED PER ECO-003543	M. AALY	B. RAMIREZ	M. AALY	04/15/2010

NOTES:

1. APPLICABLE STANDARDS/SPECIFICATIONS:
   A. ASME Y 14.5M-1994
2. PART TO BE FREE OF BURRS AND SHARP CORNERS.
3. DRAWING SHOWN FOR S&S INTERNAL USE ONLY TO IDENTIFY THE SCOPE OF COMPONENTS SUPPLIED.
4. EMD SUPPLIED EXHAUST BLANKET TO BE MODIFIED DURING INSTALLATION TO ACCOMODATE THE CONDUIT BRACKET MOUNTING, 3 PLACES.

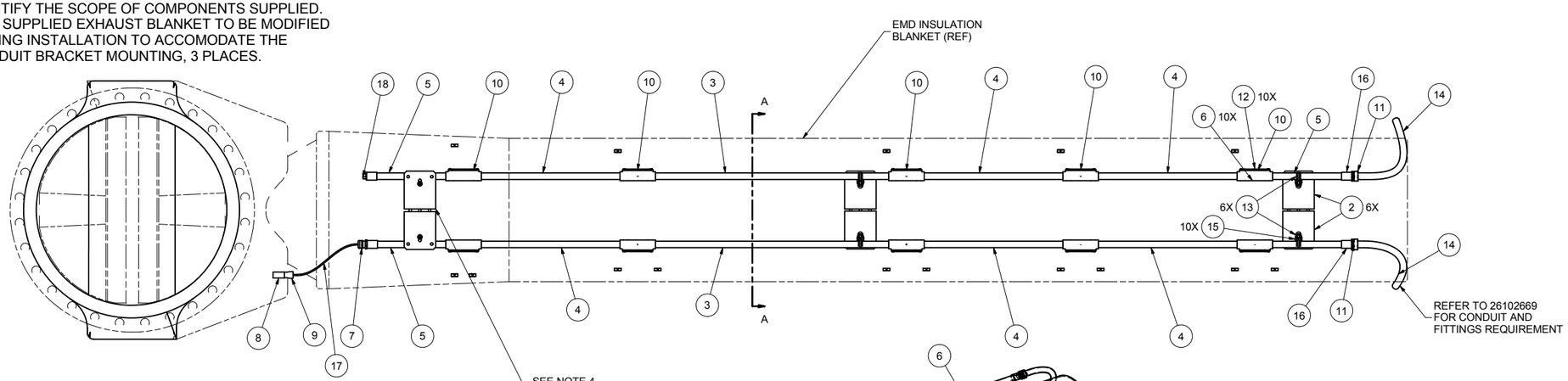

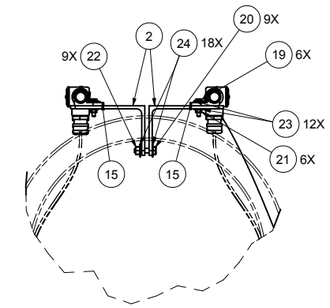

DETAIL B

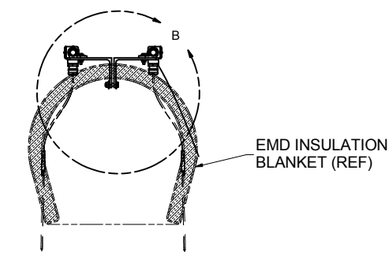

SECTION A-A

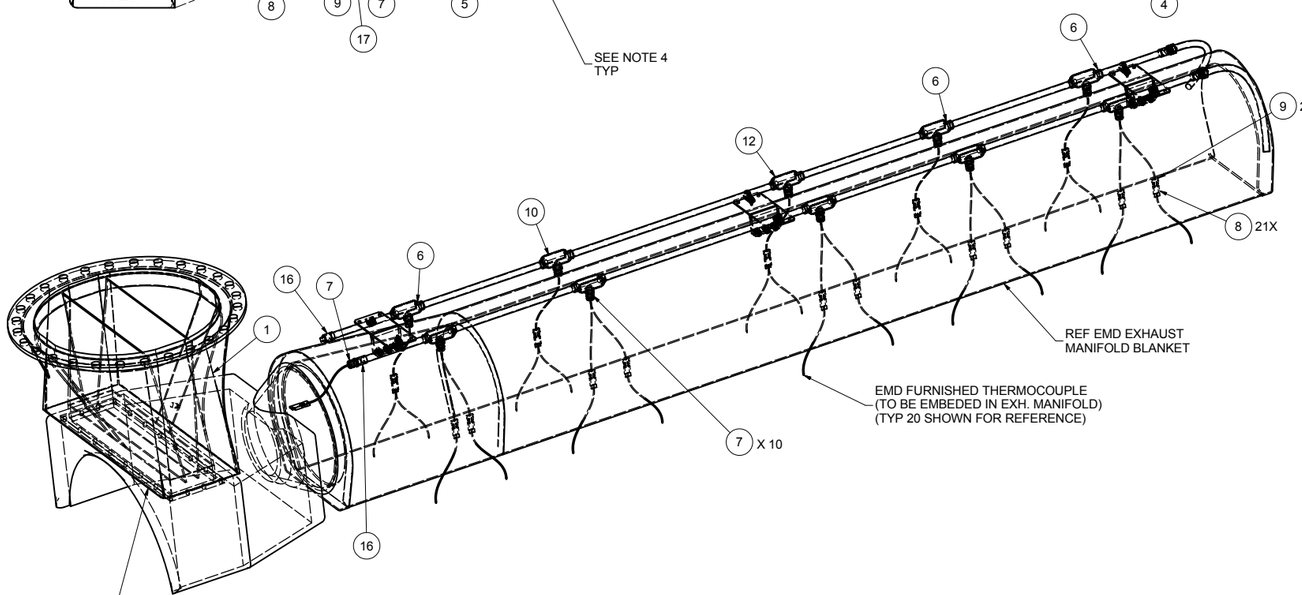

FOLLOWING ITEMS FURNISHED BY ENGINE BUILDER AS PART OF ENGINE PURCHASE ORDER:

1 - QTY (1) RECTANGULAR GASKET, P/N 9570083
2 - QTY (3) SPACERS, P/N 9570138
3 - QTY (19) BOLT, 1/2-20 SPECIAL, P/N 8259128
4 - QTY (16) NUT, 1/2-20 SPECIAL, P/N 9338626
5 - QTY (32) WASHER, 1/2, P/N 8260114

IF EXHAUST ADAPTER (24300096 NOT IN BOM) IS SHIPPED LOOSE, ABOVE ITEMS MUST ALSO SHIP WITH IT. ADAPTER NEEDS TO BE INSULATED WITH ITEM 1 PRIOR TO SHIPMENT.

C

FIND	QTY	PART NUMBER	TITLE
25	1	27102201	TC WIRING, CYLINDER EXHAUST AND ENGINE MAIN BEARINGS
24	18	AEW26X37R000WB0A91	WASHER, PLAIN, 3/8 - REGULAR - TYPE B
23	12	AEW26X25R000WB0A91	WASHER, PLAIN, 1/4 - REGULAR - TYPE B
22	9	BM36782	NUT,HEX,LOCK, 3/8-16 UNC
21	6	BM36780	NUT,HEX,LOCK, 1/4-20 UNC
20	9	AES01C375A50WA6A91	CAP SCREW, HEX HEAD, 3/8-16 UNC X 1.5 LG.
19	6	AES01C250A25WA6A91	CAP SCREW, HEX HEAD, 1/4-20 UNC X 1.25 LG.
18	1	87902	PLUG,PIPE,SQHEAD,STL,STD,3/4"NPT
17	400FT	23001810	THERMOCOUPLE SHIELD WIRE, STANDARD, TYPE J, 18AWG, 400' LONG
16	4	BM17409-1	CONDUIT, COUPLING, 3/4 NPT
15	6	BM17521	SPACER, CONDUIT, RIGID
14	REF	BM17592	CONDUIT, FLEXIBLE LI, 3/4", 20' LONG
13	6	24000046	ONE HOLE EMT SNAP-STRAP, 3/4"
12	10	24000010	COVER, CONDIUT BODY, 3/4"
11	2	24000003	CONNECTOR,ST,3/4" LIQUID TITE (6X771)
10	10	24000011	CONDUIT BODY GASKET, 3/4"
9	21	23100002	PLUG, THERMOCOUPLE TYPE J
8	21	23100003	JACK, THERMOCOUPLE TYPE J
7	11	CGB193	CABLE FITTING, .250-.375 OD
6	10	T29	TEE, ELECTRICALI, MARK 9, 3/4"
5	4	26105419	CONDUIT, RIGID, STEEL, 3/4 PIPE SIZE,12" LONG
4	6	27101751	CONDUIT, RIGID, STEEL, 3/4 PIPE SIZE, 23" LONG
3	2	27101750	CONDUIT, RIGID, STEEL, 3/4 PIPE SIZE, 38" LONG
2	6	26103516	BRACKET, MOUNT, THERMOCOUPLE CONDUIT, DM3865E GENERATOR
1	1	24200029	COVER,INSULATION,2" REUSEABLE, "TEMP-SET" FOR EMD TURBO ADAPTER 30"-125# ANSI FLANGE

PARTS LIST

UNLESS OTHERWISE SPECIFIED ALL DIMENSIONS ARE IN INCHES. DIMS IN [ ] ARE IN mm, AND ARE FOR REFERENCE ONLY.

TOLERANCES UNLESS NOTED OTHERWISE
.X = ± .1
.XX = ± .06
.XXX = ± .005
ANGLES = ± .5°

THIRD ANGLE PROJECTION

DRAWN	B. LUTZ	5/4/2009
CHECKED	M. AALY	5/4/2009
PROJ ENG	M. AALY	5/4/2009

STEWART & STEVENSON LLC

TITLE: EXHAUST SYSTEM INSTALLATION, DM3580E GENERATOR

SIZE	CAGE CODE	DWG NO	REV
D	81381	26110758	C

SCALE: NTS FILE: 26110758.idw SHEET 1 OF 1

RELEASED

REVISION HISTORY					
REV	DESCRIPTION	DESIGNER	CHECKED BY	ENGINEER	APP. DATE
-	INITIAL RELEASE PER ECO-001090	B. LUTZ	B. RAMIREZ	M. AALY	5/18/2009
A	REVISED PER ECO-001497	IOAN BOERU	B. RAMIREZ	M. AALY	07/2/2009

NOTES:

1. APPLICABLE STANDARDS/SPECIFICATIONS:
   A. ASME Y 14.5M-1994

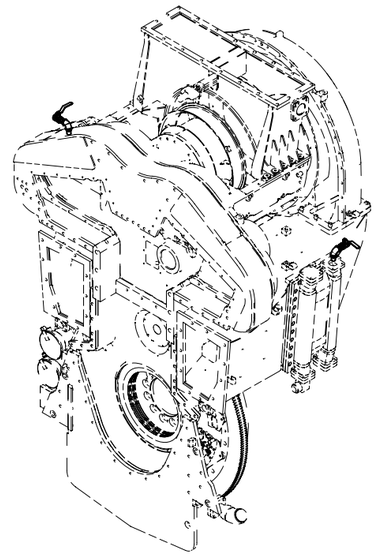

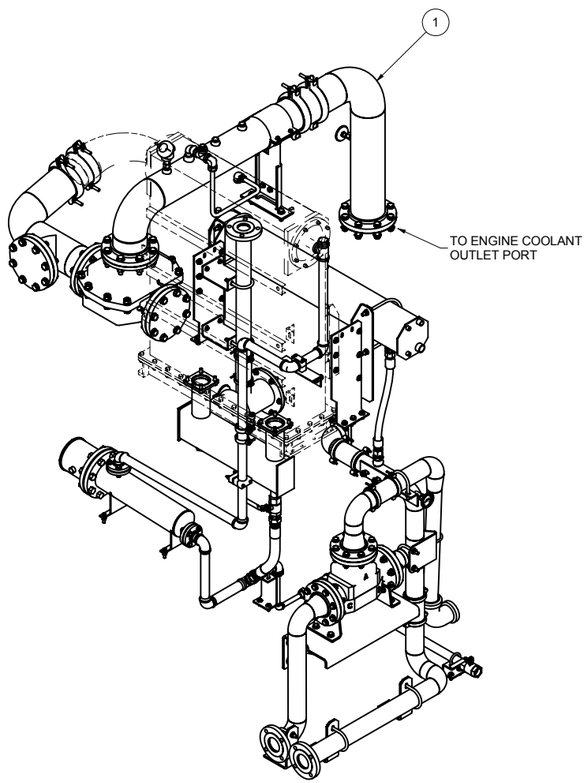

FIND	QTY	PART NUMBER	TITLE
2	1	27101430	COOLING SYSTEM, AFTERCOOLER, DM3580E
1	1	27101431	JACKET COOLING SYSTEM WITH IMMERSION HEATER, DM3580E GEN SET

PARTS LIST

UNLESS OTHERWISE SPECIFIED
ALL DIMENSIONS ARE IN INCHES.
DIMS IN [] ARE IN mm, AND
ARE FOR REFERENCE ONLY.

TOLERANCES UNLESS NOTED OTHERWISE
.X = ± .1
.XX = ± .06
.XXX = ± .005
ANGLES = ± .5°

DRAWN	B. LUTZ	5/2/2009
CHECKED	B. RAMIREZ	5/18/2009
PROJ ENG	M. AALY	5/18/2009

THIRD ANGLE PROJECTION

STEWART & STEVENSON LLC

TITLE
COOLING SYSTEM, DM3580EG7C-T2
Gen Set

SIZE	CAGE CODE	DWG NO	REV
D	81381	26110759	A

SCALE: NTS FILE: 26110759.idw SHEET 1 OF 1

REVISION HISTORY					
REV	DESCRIPTION	DESIGNER	CHECKED BY	ENGINEER	APP. DATE
-	INITIAL RELEASE PER ECO-001140	I. BOERU	B. RAMIREZ	M. AALY	4/30/2009

NOTES:

1. APPLICABLE STANDARDS/SPECIFICATIONS:
   A. ASME Y 14.5M-1994

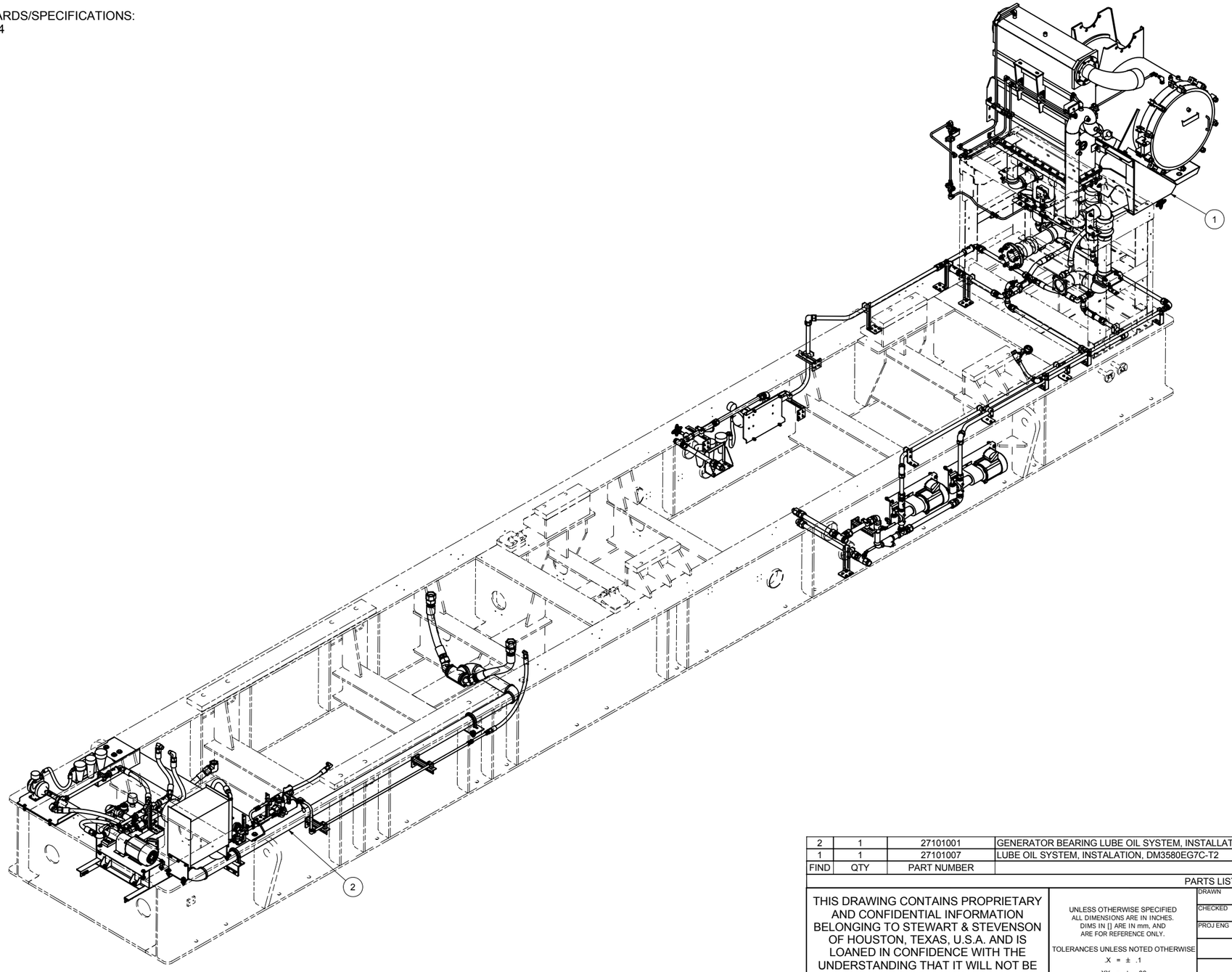

FIND	QTY	PART NUMBER	TITLE
2	1	27101001	GENERATOR BEARING LUBE OIL SYSTEM, INSTALLATION, DM3580EG7C-T2
1	1	27101007	LUBE OIL SYSTEM, INSTALATION, DM3580EG7C-T2

PARTS LIST

UNLESS OTHERWISE SPECIFIED
ALL DIMENSIONS ARE IN INCHES.
DIMS IN [] ARE IN mm, AND
ARE FOR REFERENCE ONLY.

TOLERANCES UNLESS NOTED OTHERWISE
.X = ± .1
.XX = ± .06
.XXX = ± .005
ANGLES = ± .5°

DRAWN	I. BOERU	4/30/2009
CHECKED	B. RAMIREZ	4/30/2009
PROJ ENG	M. AALY	4/30/2009

THIRD ANGLE PROJECTION

STEWART & STEVENSON LLC

TITLE
LUBE OIL SYSTEM, INSTALLATION AND ASSEMBLY DRAWING

SIZE	CAGE CODE	DWG NO	REV
D	81381	26110760	-

SCALE: NTS FILE: 26110760.idw SHEET 1 OF 1

REVISION HISTORY

REV	DESCRIPTION	DESIGNER	CHECKED BY	ENGINEER	APP. DATE
-	INITIAL RELEASE PER ECO-001158	I. BOERU	B.RAMIREZ	M.AALY	5/13/2009

NOTES:

1. APPLICABLE STANDARDS/SPECIFICATIONS:
   A. ASME Y 14.5M-1994
2. PART TO BE FREE OF BURRS AND SHARP CORNERS.

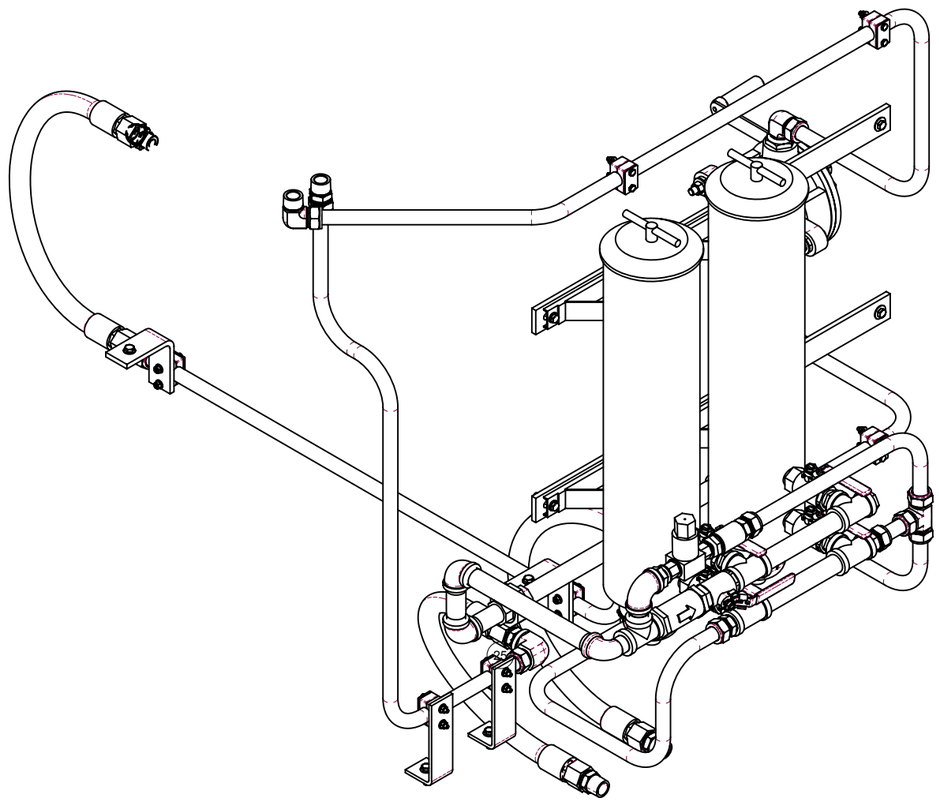

FIND	QTY	PART NUMBER	TITLE
57	1	BM12904	UNION, PIPE, 1", THD, 316SS
56	3	AES01C375A50WA6A91	CAP SCREW, HEX HEAD, 3/8-16 UNC X 1.5 LG.
55	1	22600156	ADAPTER, SWAGELOK 1" TUBE TO 1" JIC
54	2	21900033	BUSHING,PIPE,SS,6000#,1-1/4"NPTM X 1"NPTF
53	2	AES01C250C25WA6A91	CAP SCREW, HEX HEAD, 1/4-20 UNC X 3.25 LG.
52	1	27101647	SPACER PLATE
51	4	AES01C250B87WA6A91	CAP SCREW, HEX HEAD, 1/4-20 UNC X 3 LG.
50	20	BM36780	NUT,HEX,LOCK, 1/4-20 UNC
49	20	AEW24X25N000WB0A91	WASHER, PLAIN, 1/4 - NARROW - TYPE A
48	14	AES01C250B25WA6A91	CAP SCREW, HEX HEAD, 1/4-20 UNC X 2.25 LG.
47	6	AES01C375A25WA6A91	CAP SCREW, HEX HEAD, 3/8-16 UNC X 1.25 LG.
46	4	AEW24X37N000WB0A91	WASHER, PLAIN, 3/8 - NARROW - TYPE A
45	1	27101600	NIPPLE,PIPE,TBE,SS304,SCH40,1"MNPT X 12.6"
44	1	27101599	NIPPLE,PIPE,TBE,SS304,SCH40,1"MNPT X 7.53"
43	2	BM36784	NUT,HEX,LOCK, 1/2-13 UNC
42	2	AES01C500B50WA6A91	CAP SCREW, HEX HEAD, 1/2-13 UNC X 2.5 LG.
41	1	27101589	TUBE, RND, SS, 1"OD, .095" WALL 50.71" LONG
40	2	27101585	TUBE SUPPORT BRACKET
39	1	27101583	TUBE, RND, SS, 1"OD, .095" WALL 46.35" LONG
38	2	27101582	TUBE SUPPORT BRACKET
37	8	BM36782	NUT,HEX,LOCK, 3/8-16 UNC
36	10	AEW26X37R000WB0A91	WASHER, PLAIN, 3/8 - REGULAR - TYPE B
35	3	AES01C375A75WA6A91	CAP SCREW, HEX HEAD, 3/8-16 UNC X 1.75 LG.
34	4	AEW26X37N000WB0A91	WASHER, PLAIN, 3/8 - NARROW - TYPE B
33	3	AEW26X50R000WB0A91	WASHER, PLAIN, 1/2 - REGULAR - TYPE B
32	1	AEW24X50W000WB0A91	WASHER, PLAIN, 1/2 - WIDE - TYPE A
31	2	27101563	BRACKET, SUPPORT
30	1	27101644	TUBE, RND, SS, 1"OD, .095" WALL X 78.2" LONG
29	3	22400072	ASSY,HOSE,1"-FJX-FJX-26"
28	4	22600179	SAE 070102, 16-16, SS
27	1	27101641	TUBE, RND, SS, 1"OD, .095" WALL X 22.25" LONG
26	1	27101646	TUBE, RND, SS, 1"OD, .095" WALL X 57.2" LONG
25	2	SS-1610-8-16	SS SWAGELOK TUBE FITTING, FEMALE ELBOW, 1 IN. TUBE OD X 1 IN. FEMALE NPT
24	1	27101643	TUBE, RND, SS, 1"OD, .095" WALL X 4" LONG
23	3	213122	NIPPLE,PIPE,TBE,SS304,SCH40,1"MNPT X 4"
22	2	12881256	COUPLING,PIPE,FULL,SS304,150#,1"NPT
21	1	22900046	TRANSMITTER, DIFFERENTIAL PRESS
20	2	22602048	HYDRAULIC ADAPTER, (HEX NIPPLE), 1" MNPT X1/2" MNPT, SS
19	3	21300095	NIPPLE,PIPE,TBE,SS304,SCH40,1"MNPT X CLOSE
18	1	20060391	VALVE, BALL,1" NPTF, 600 CLASS
17	1	27101642	TUBE, RND, SS, 1"OD, .095" WALL X 44.5" LONG
16	2	SS-1610-2-16	SS SWAGELOK TUBE FITTING, MALE ELBOW, 1" TUBE OD X 1" MALE NPT
15	1	27101766	NIPPLE,PIPE,TBE,SS304,SCH40,1"MNPT X 19.75"
14	1	213149	NIPPLE,PIPE,TBE,SS304,SCH40,1"MNPT X 6"
13	1	SF0100594	ELBOW,PIPE,STREET,SS304,150#,90DEG,1"NPT
12	1	SS-1610-3	SS SWAGELOK TUBE FITTING, UNION TEE, 1 IN. TUBE OD
11	1	22000007	VALVE,CHECK,1"NPTF
10	2	24600051	SUPPORT, 1" PIPE, SWAGELOK P/N 304-S5-PP-16P
9	4	SS-1610-1-16	SS SWAGELOK TUBE FITTING, MALE CONNECTOR, 1" Tube OD X 1" MALE NPT
8	1	77905	PLUG,PIPE,HEXHEAD,SS304,3000#,1"NPT
7	1	21500014	TEE,PIPE,THREADED,SS304,150#,1"NPT
6	1	SS-1610-9	SS SWAGELOK TUBE FITTING, UNION ELBOW, 1" TUBE OD
5	8	24600050	SUPPORT, 1" TUBE, SWAGELOK P/N 304-S3-PP-16T
4	1	213146	NIPPLE,PIPE,TBE,SS304,SCH40,1"MNPT X 2"
3	5	SF0100L94	ELBOW,PIPE,THREADED,SS304,90DEG,150#,1"NPT
2	1	20060392	PUMP,PRIMING,FUEL,MANUAL
1	1	23800018	FILTER, FUEL, MARINE

PARTS LIST

UNLESS OTHERWISE SPECIFIED
ALL DIMENSIONS ARE IN INCHES.
DIMS IN [] ARE IN mm, AND ARE FOR REFERENCE ONLY.

TOLERANCES UNLESS NOTED OTHERWISE
.X = ± .1
.XX = ± .06
.XXX = ± .005
ANGLES = ± .5

DRAWN	I.BOERU	3/3/2009
CHECKED	B.RAMIREZ	5/13/2009
PROJ. ENG	M.AALY	5/13/2009

THIRD ANGLE PROJECTION

STEWART & STEVENSON LLC

TITLE: FUEL SYSTEM INSTALLATION, DM3580E GEN SET

SIZE	CAGE CODE	DWG NO	REV
D	81381	26110761	-

SCALE: NTS FILE: 26110761.idw SHEET 1 OF 5

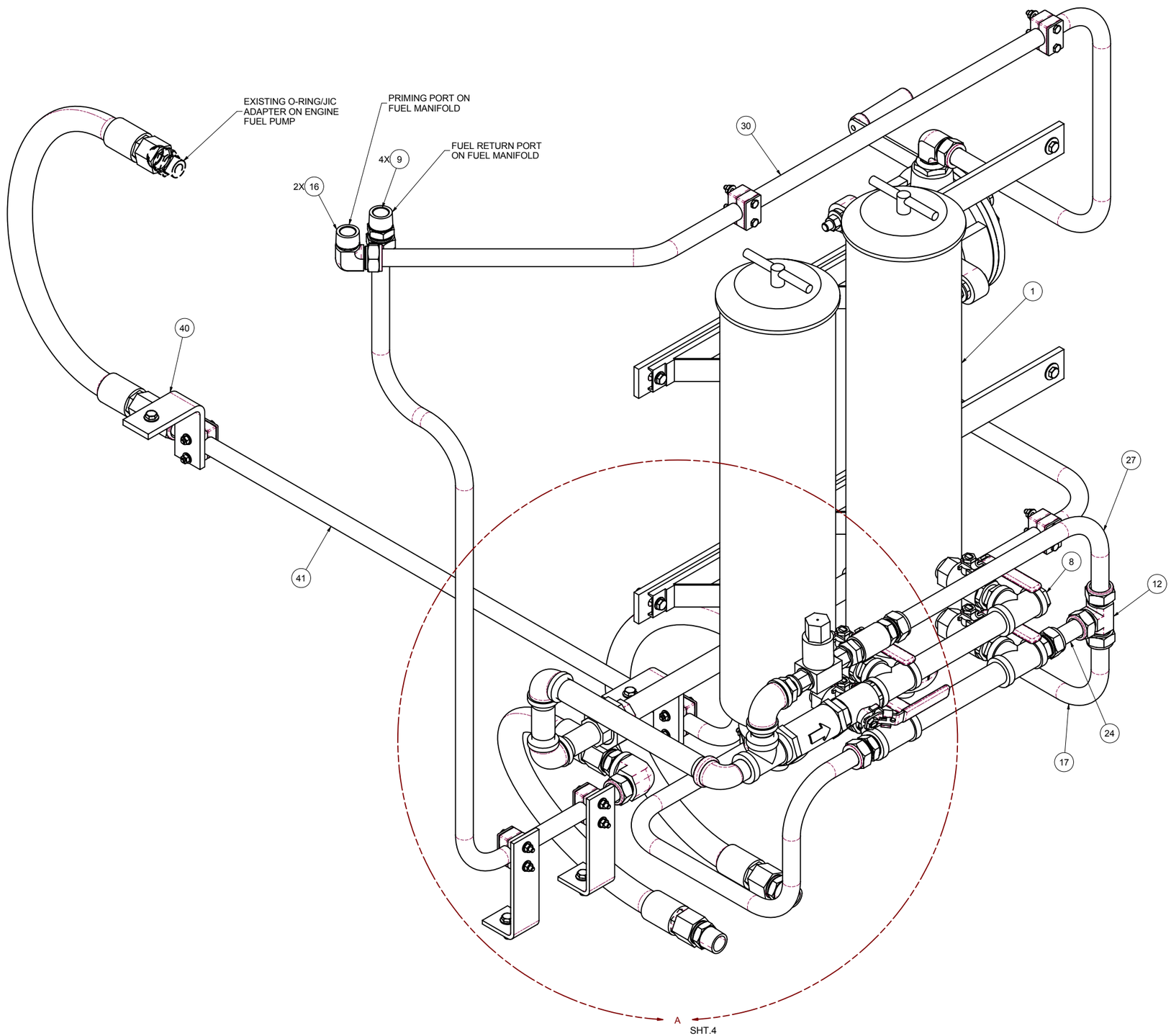

STEWART & STEVENSON LLC

TITLE

FUEL SYSTEM INSTALLATION, DM3580E GEN SET

SIZE	CAGE CODE	DWG NO	REV
D	81381	26110761	-

SCALE: NTS FILE: 26110761.idw SHEET 2 OF 5

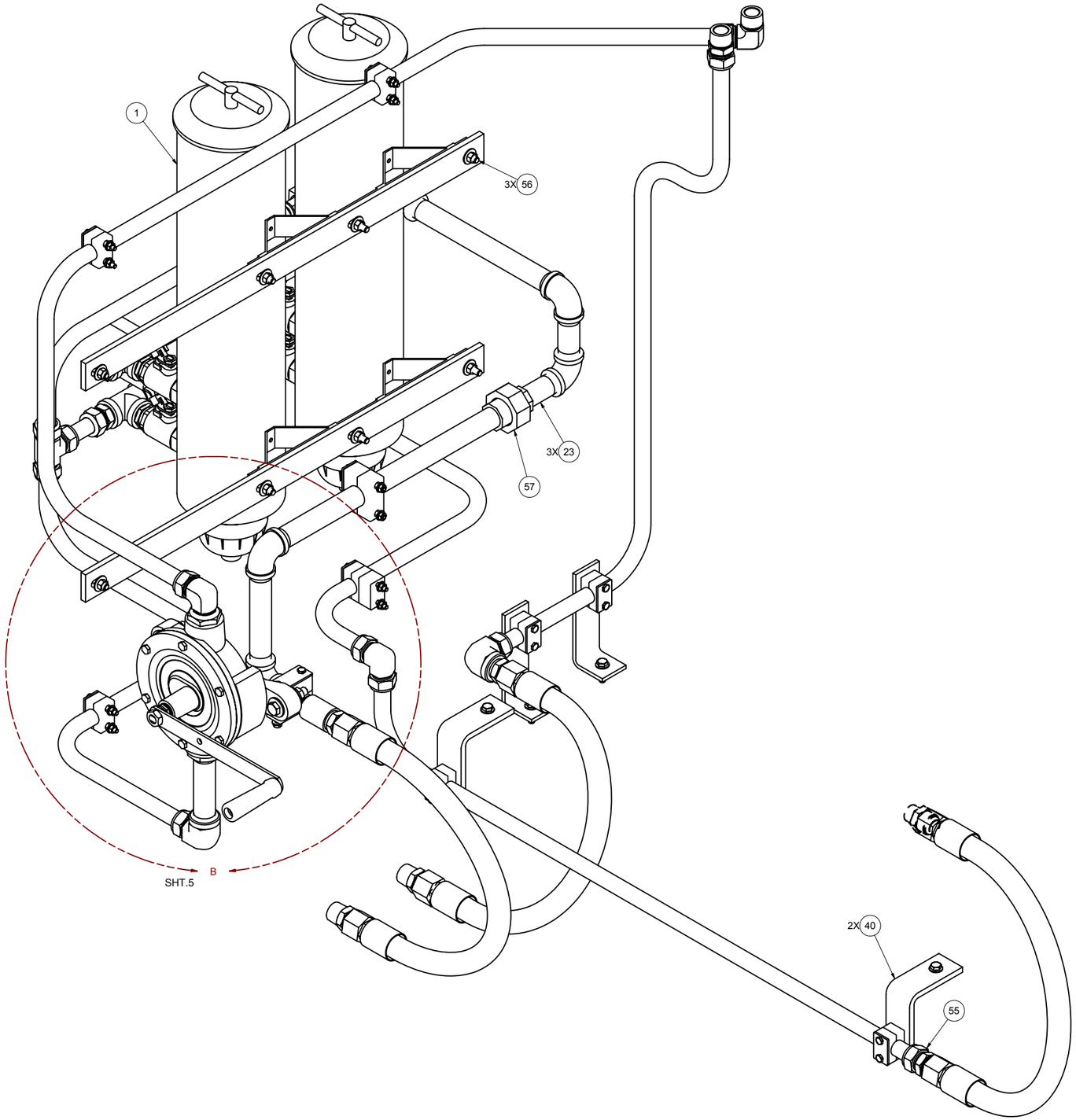

STEWART & STEVENSON LLC

TITLE

FUEL SYSTEM INSTALLATION, DM3580E GEN SET

SIZE	CAGE CODE	DWG NO	REV
D	81381	26110761	-

SCALE: NTS FILE: 26110761.idw SHEET 3 OF 5

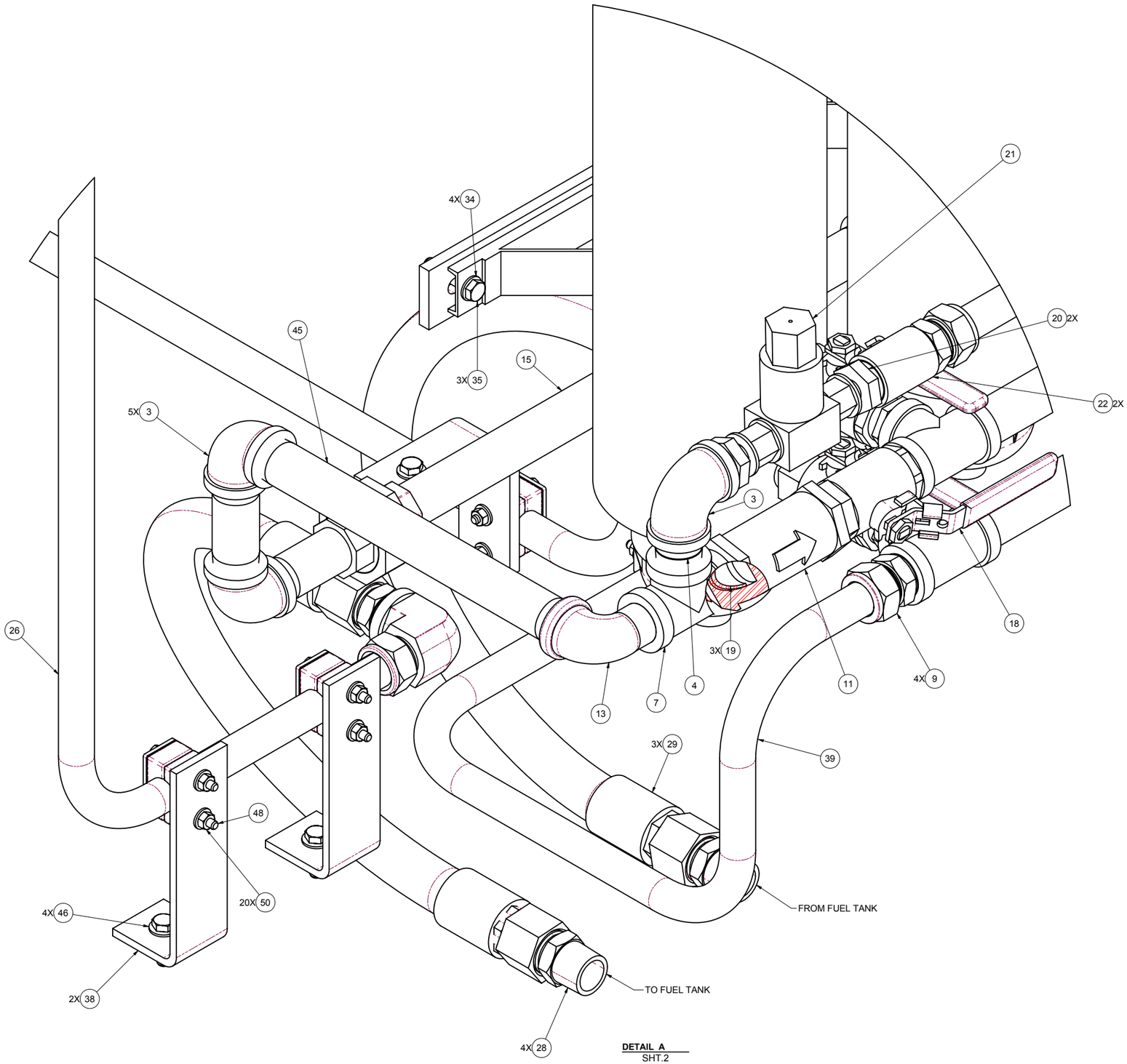

DETAIL A
SHT.2

STEWART & STEVENSON LLC

TITLE
FUEL SYSTEM INSTALLATION,
DM3580E GEN SET

SIZE	CAGE CODE	DWG NO	REV
D	81381	26110761	-

SCALE: NTS | FILE: 26110761.idw | SHEET 4 OF 5

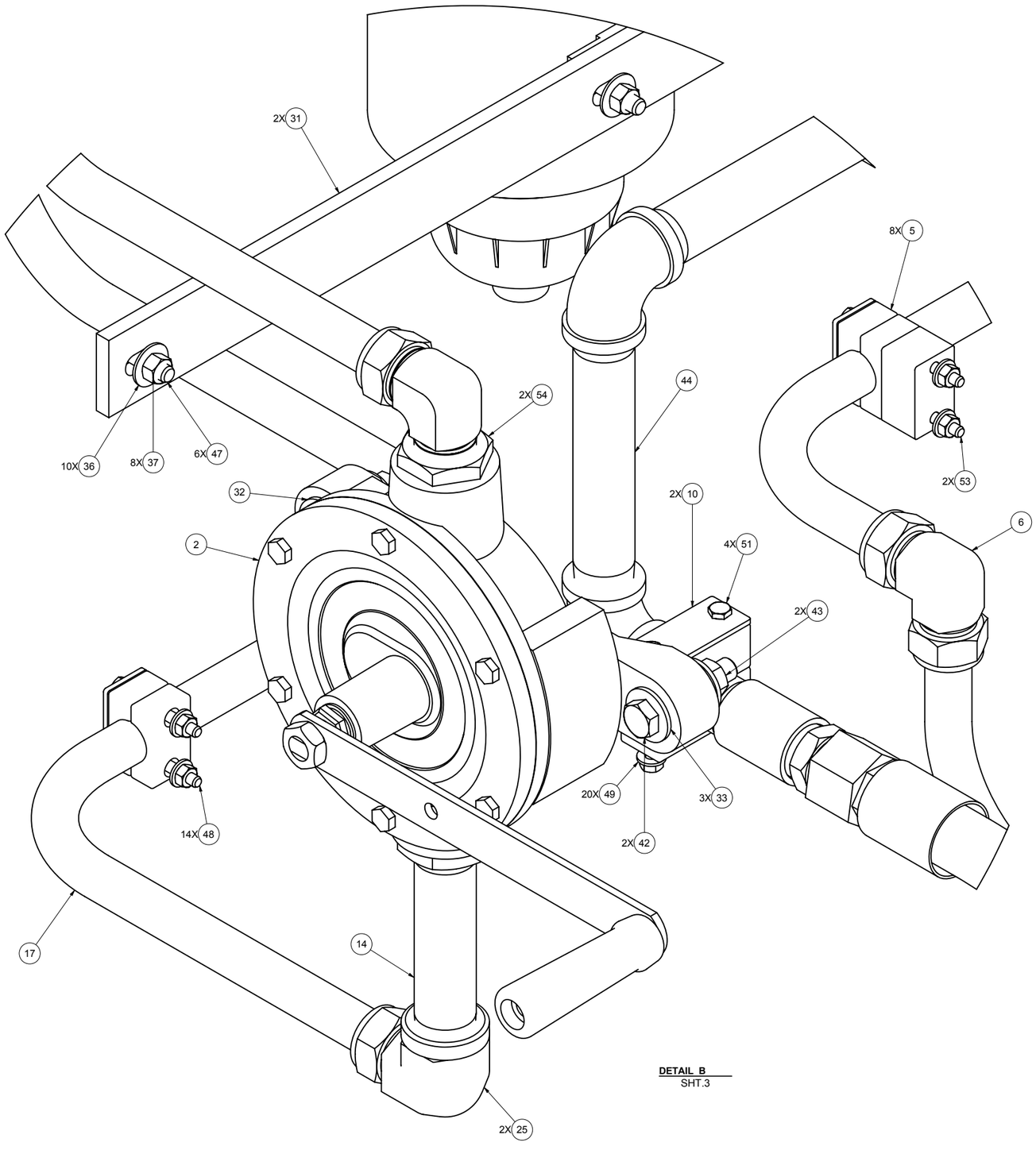

DETAIL B
SHT.3

STEWART & STEVENSON LLC

TITLE
FUEL SYSTEM INSTALLATION, DM3580E GEN SET

SIZE	CAGE CODE	DWG NO	REV
D	81381	26110761	-

SCALE: NTS | FILE: 26110761.idw | SHEET 5 OF 5

REVISION HISTORY

REV	DESCRIPTION	DESIGNER	CHECKED BY	ENGINEER	APP. DATE
-	RELEASED PER ECO-001348	B. LUTZ	M. AALY	C. HUELSMAN	6/15/2009
A	REVISED PER ECO-001835	B. LUTZ	M. AALY	C. HUELSMAN	9/29/2009

NOTES:

1. APPLICABLE STANDARDS/SPECIFICATIONS:
   A. ASME Y 14.5M-1994
2. THIS HARNESS LAYOUT IS A GUIDELINE FOR INSTALLATION.
   AND IS IN NO WAY TO OVER-RIDE THE SCHEMATIC 26111181.

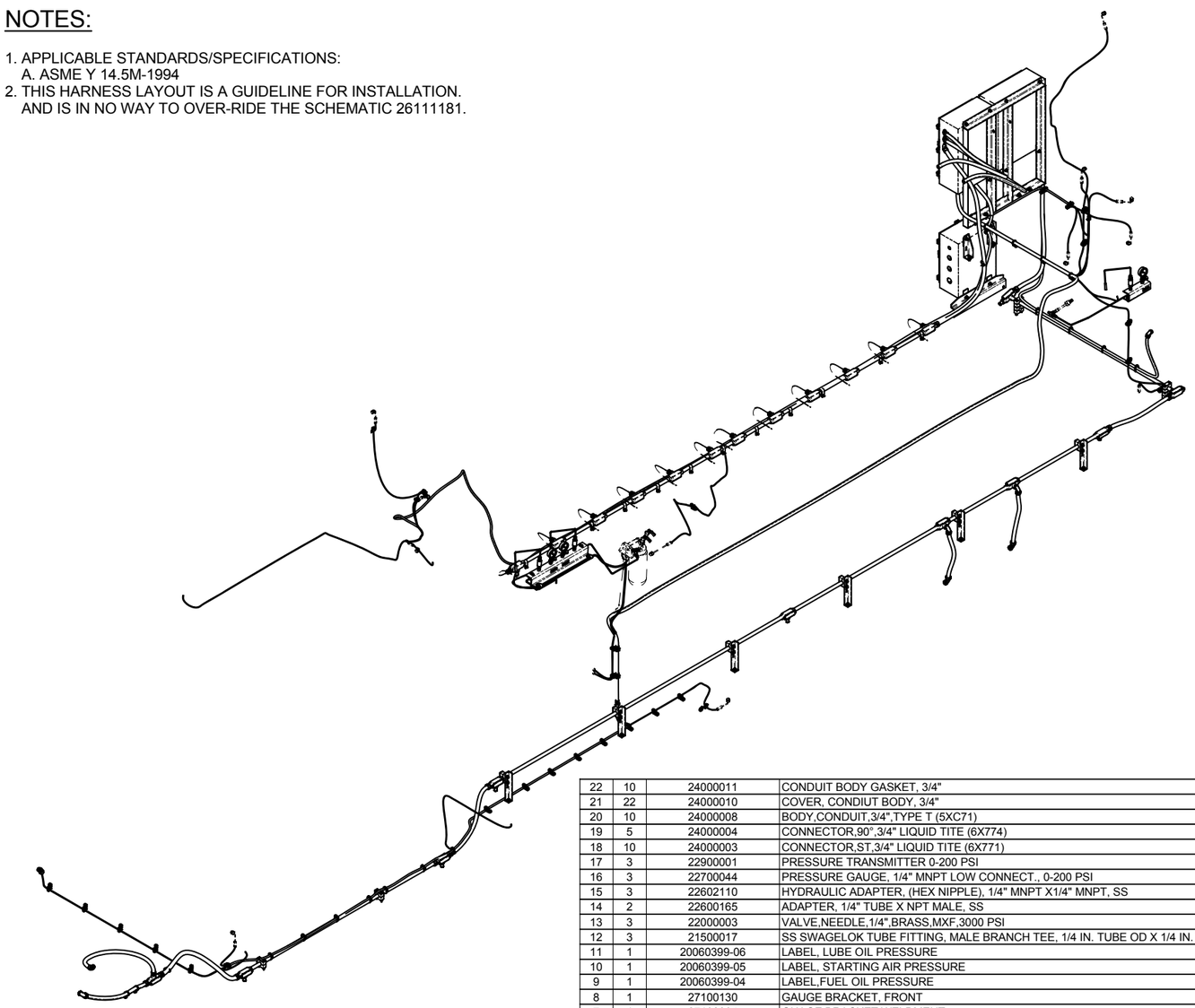

FIND	QTY	PART NUMBER	TITLE
22	10	24000011	CONDUIT BODY GASKET, 3/4"
21	22	24000010	COVER, CONDIUT BODY, 3/4"
20	10	24000008	BODY,CONDUIT,3/4",TYPE T (5XC71)
19	5	24000004	CONNECTOR,90",3/4" LIQUID TITE (6X774)
18	10	24000003	CONNECTOR,ST,3/4" LIQUID TITE (6X771)
17	3	22900001	PRESSURE TRANSMITTER 0-200 PSI
16	3	22700044	PRESSURE GAUGE, 1/4" MNPT LOW CONNECT., 0-200 PSI
15	3	22602110	HYDRAULIC ADAPTER, (HEX NIPPLE), 1/4" MNPT X1/4" MNPT, SS
14	2	22600165	ADAPTER, 1/4" TUBE X NPT MALE, SS
13	3	22000003	VALVE,NEEDLE,1/4",BRASS,MXF,3000 PSI
12	3	21500017	SS SWAGELOK TUBE FITTING, MALE BRANCH TEE, 1/4 IN. TUBE OD X 1/4 IN. TUBE OD X 1/4 IN. MALE NPT
11	1	20060399-06	LABEL, LUBE OIL PRESSURE
10	1	20060399-05	LABEL, STARTING AIR PRESSURE
9	1	20060399-04	LABEL,FUEL OIL PRESSURE
8	1	27100130	GAUGE BRACKET, FRONT
7	1	27102264	GUAGE BRACKET WELDMENT
6	1	27100958	FRAME, SUPPORT, WELDMENT, J BOX
5	1	27101885	MODIFIED DC JUNCTION BOX
4	1	27102265	BRACKET, MOUNTING, TERMINAL STRIP
3	1	26101962	GENERATOR AC JUNCTION BOX
2	REF	26111181	ENGINE/GENERATOR CONTROL SCHEMATIC
1	REF	27102202	WIRE HARNESS

PARTS LIST

FIND	QTY	PART NUMBER	TITLE
90	12	T29	TEE, ELECTRICALI, MARK 9, 3/4"
89	47	T120R9K2	TIE,HEAVY DUTY LASHING
88	3	SS-400-2-4	SS SWAGELOK TUBE FITTING, MALE ELBOW, 1/4 IN. TUBE OD X 1/4 IN. MALE NPT
87	2	SS-4-ST	STAINLESS STEEL PIPE FITTING, STREET TEE, 1_4 IN. FEMALE NPT X 1_4 IN. MALE NPT X 1/4 IN. FEMALE NPT
86	33	HDM-HT-38	MOUNT, CABLE TIE, HEAVY DUTY
85	6	HC1000	CABLE CLAMP 1"
84	7	ECD15	BREATHER-DRAIN, 1/2 IN NPT
83	12	CGB193	CABLE FITTING, .250-.375 OD
82	4	BM36784	NUT,HEX,LOCK, 1/2-13 UNC
81	16	BM36782	NUT,HEX,LOCK, 3/8-16 UNC
80	20	BM36780	NUT,HEX,LOCK, 1/4-20 UNC
79	8	AEW26X50R000WB0A91	WASHER, PLAIN, 1/2 - REGULAR - TYPE B
78	15	AEW26X37R000WB0A91	WASHER, PLAIN, 3/8 - REGULAR - TYPE B
77	16	AEW26X25R000WB0A91	WASHER, PLAIN, 1/4 - REGULAR - TYPE B
76	32	AEW26X25N000WB0A91	WASHER, PLAIN, 1/4 - NARROW - TYPE B
75	28	AEW24X37N000WB0A91	WASHER, PLAIN, 3/8 - NARROW - TYPE A
74	4	AEW24X25N000WB0A91	WASHER, PLAIN, 1/4 - NARROW - TYPE A
73	2	AEW08X500000WB0A91	WASHER, LOCK, HEAVY HELICAL SPRING, 1/2"
72	6	AEW07X438000WB0A91	WASHER, LOCK, HELICAL SPRING, REGULAR, 7/16"
71	27	AEW07X250000WB0A91	WASHER, LOCK, HELICAL SPRING, REGULAR, 1/4"
70	6	AESG3C112438WB0A91	SCREW, FILLISTER HEAD, TYPE 1, CROSS RECESSED, #4-40 UNC X 0.4375 LG.
69	2	AES02C500A00WA6A91	CAP SCREW, HEX HEAD, 1/2-13 UNC X 1 LG.
68	4	AES01C500A50WA6A91	CAP SCREW, HEX HEAD, 1/2-13 UNC X 1.5 LG.
67	6	AES01C438875WA6A91	CAP SCREW, HEX HEAD, 7/16-14 UNC X 0.875 LG.
66	1	AES01C438500WA6A91	CAP SCREW, HEX HEAD, 7/16-14 UNC X 0.5 LG.
65	11	AES01C375A25WA6A91	CAP SCREW, HEX HEAD, 3/8-16 UNC X 1.25 LG.
64	9	AES01C375A00WA6A91	CAP SCREW, HEX HEAD, 3/8-16 UNC X 1 LG.
63	11	AES01C375750WA6A91	CAP SCREW, HEX HEAD, 3/8-16 UNC X 0.75 LG.
62	4	AES01C250E50WA6A91	CAP SCREW, HEX HEAD, 1/4-20 UNC X 5.5 LG.
61	16	AES01C250C25WA6A91	CAP SCREW, HEX HEAD, 1/4-20 UNC X 3.25 LG.
60	4	AES01C250B50WA6A91	CAP SCREW, HEX HEAD, 1/4-20 UNC X 2.5 LG.
59	27	AES01C250750WA6A91	CAP SCREW, HEX HEAD, 1/4-20 UNC X 0.75 LG.
58	11	900729-23	1.00 ID INSULATED CLAMP
57	1	87902	PLUG,PIPE,SQHEAD,STL,STD,3/4"NPT
56	8	87883	BUSHING,PIPE,STL,6000#,3/4"NPTM X 1/2"NPTF
55	1	27103111	BRACKET, SUPPORT
54	2	27103110	BRACKET, SUPPORT, WELDMENT
53	1	27102212	CONDUIT, RIGID, STEEL, 3/4 PIPE SIZE, 80"LG
52	1	27102211	CONDUIT, RIGID, STEEL, 3/4 PIPE SIZE, 61,8" LG
51	1	27102210	CONDUIT, RIGID, STEEL, 3/4 PIPE SIZE, 34" LG
50	1	27102207	CONDUIT, RIGID, STEEL, 3/4 PIPE SIZE, 25.6 LG
49	1	27102206	CONDUIT, RIGID, STEEL, 3/4 PIPE SIZE, 120 LG
48	4	27102205	CONDUIT, RIGID, STEEL, 3/4 PIPE SIZE, 13" LONG
47	1	27102204	CONDUIT, RIGID, STEEL, 3/4 PIPE SIZE, 6" LONG
46	6	27102203	CONDUIT, RIGID, STEEL, 3/4 PIPE SIZE, 12" LONG
45	1	27102221	CONDUIT, RIGID, STEEL, 3/4 PIPE SIZE, 68.8 LONG
44	6	27102197	SUPPORT, CONDUIT, VERTICAL, WELDMENT
43	1	27102215	TUBE, RND, SS, 1/4 OD .035 WALL, 34.5" LG
42	1	27102196	TUBE, RND, SS, 1/4" OD, .035" WALL, 29.9" LONG
41	1	27102195	TUBE, RND, SS, 1/4" OD, .035" WALL, 19.00" LONG
40	1	27102198	1/2" ELECTRIFLEX LIQUITITE SERIES PART #, LA-12, 2.75' LG
39	1	27102126	3/4" ELECTRIFLEX LIQUITITE SERIES PART #, LA-12, 3.0' LG
38	1	27102127	3/4" ELECTRIFLEX LIQUITITE SERIES PART #, LA-12, 1.5' LG
37	1	27102128	3/4" ELECTRIFLEX LIQUITITE SERIES PART #, LA-12, 1.2' LG
36	1	27102129	3/4" ELECTRIFLEX LIQUITITE SERIES PART #, LA-12, 2.1' LG
35	1	27102130	3/4" ELECTRIFLEX LIQUITITE SERIES PART #, LA-12, 5' LG
34	1	27102131	1/2" ELECTRIFLEX LIQUITITE SERIES PART #, LA-10, 12.3' LG
33	1	27102132	3/4" ELECTRIFLEX LIQUITITE SERIES PART #, LA-12, 6.4' LG
32	1	27102133	3/4" ELECTRIFLEX LIQUITITE SERIES PART #, LA-12, 5.3' LG
31	1	27102134	3/4" ELECTRIFLEX LIQUITITE SERIES PART #, LA-12, 6.0' LG
30	1	27102135	3/4" ELECTRIFLEX LIQUITITE SERIES PART #, LA-12, 2.2' LG
29	1	27102136	3/4" ELECTRIFLEX LIQUITITE SERIES PART #, LA-12, 2.0' LG
28	3	27100144	TUBE EXTENSION, GAUGE BRACKET
27	12	24600241	SUPPORT, 3/4" PIPE, SWAGELOK P/N 304-S5-PP-12P
26	2	24600033	SUPPORT, 1/4" TUBE, SWAGELOK
25	4	24500073	NUT, HEX FLANGED, PREVAILING TORQUE, 1/4 - 20, GRADE 8, ZINC PLATED
24	8	24000071	FITTING,CONDUIT,1/2",90DEG
23	1	24000035	1_2 FLEX. CONNECTOR

PARTS LIST

UNLESS OTHERWISE SPECIFIED
ALL DIMENSIONS ARE IN INCHES.
DIMS IN [] ARE IN mm, AND
ARE FOR REFERENCE ONLY.

TOLERANCES UNLESS NOTED OTHERWISE
.X = ± .1
.XX = ± .06
.XXX = ± .005

ANGLES = ± .5°

DRAWN	B. LUTZ	6/5/2009
CHECKED	M. AALY	6/15/2009
PROJ ENG	C. HUELSMAN	6/15/2009

THIRD ANGLE PROJECTION

STEWART & STEVENSON LLC

TITLE
INSTALLATION, ELECTRICAL & MECHANICAL INSTRUMENTATION, DM3580EG7C-T2

SIZE	CAGE CODE	DWG NO	REV
D	81381	26110762	A

SCALE: NTS FILE: 26110762.idw SHEET 1 OF 3

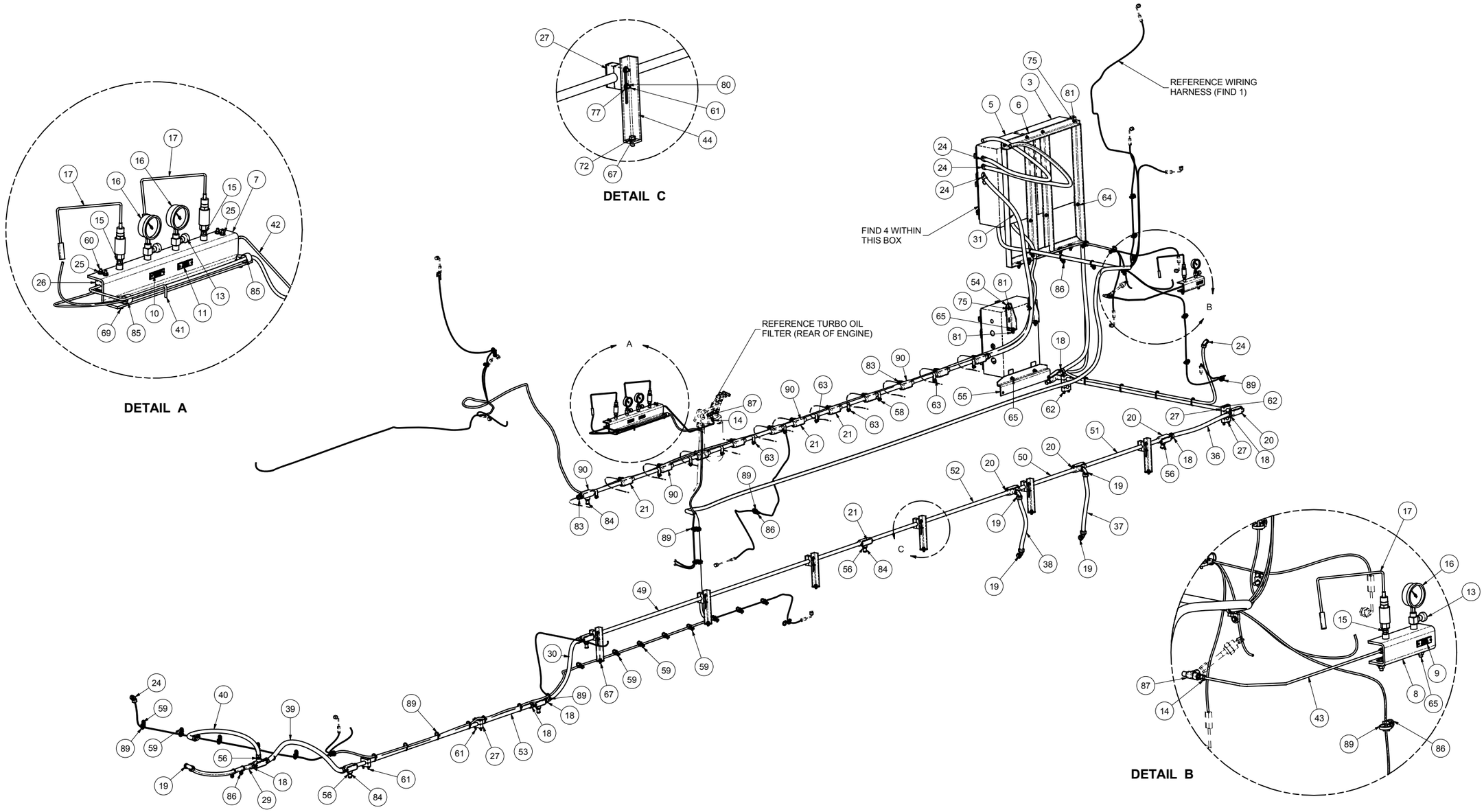

UNLESS OTHERWISE SPECIFIED
ALL DIMENSIONS ARE IN INCHES.
DIMS IN [] ARE IN mm, AND
ARE FOR REFERENCE ONLY.

TOLERANCES UNLESS NOTED OTHERWISE
.X = ± .1
.XX = ± .06
.XXX = ± .005

ANGLES = ± .5°

DRAWN	B. LUTZ	6/5/2009
CHECKED	M. AALY	6/15/2009
PROJ ENG	C. HUELSMAN	6/15/2009

THIRD ANGLE PROJECTION

STEWART & STEVENSON LLC

TITLE
INSTALLATION, ELECTRICAL & MECHANICAL INSTRUMENTATION, DM3580EG7C-T2

SIZE	CAGE CODE	DWG NO	REV
D	81381	26110762	A

SCALE: NTS FILE: 26110762.idw SHEET 2 OF 3

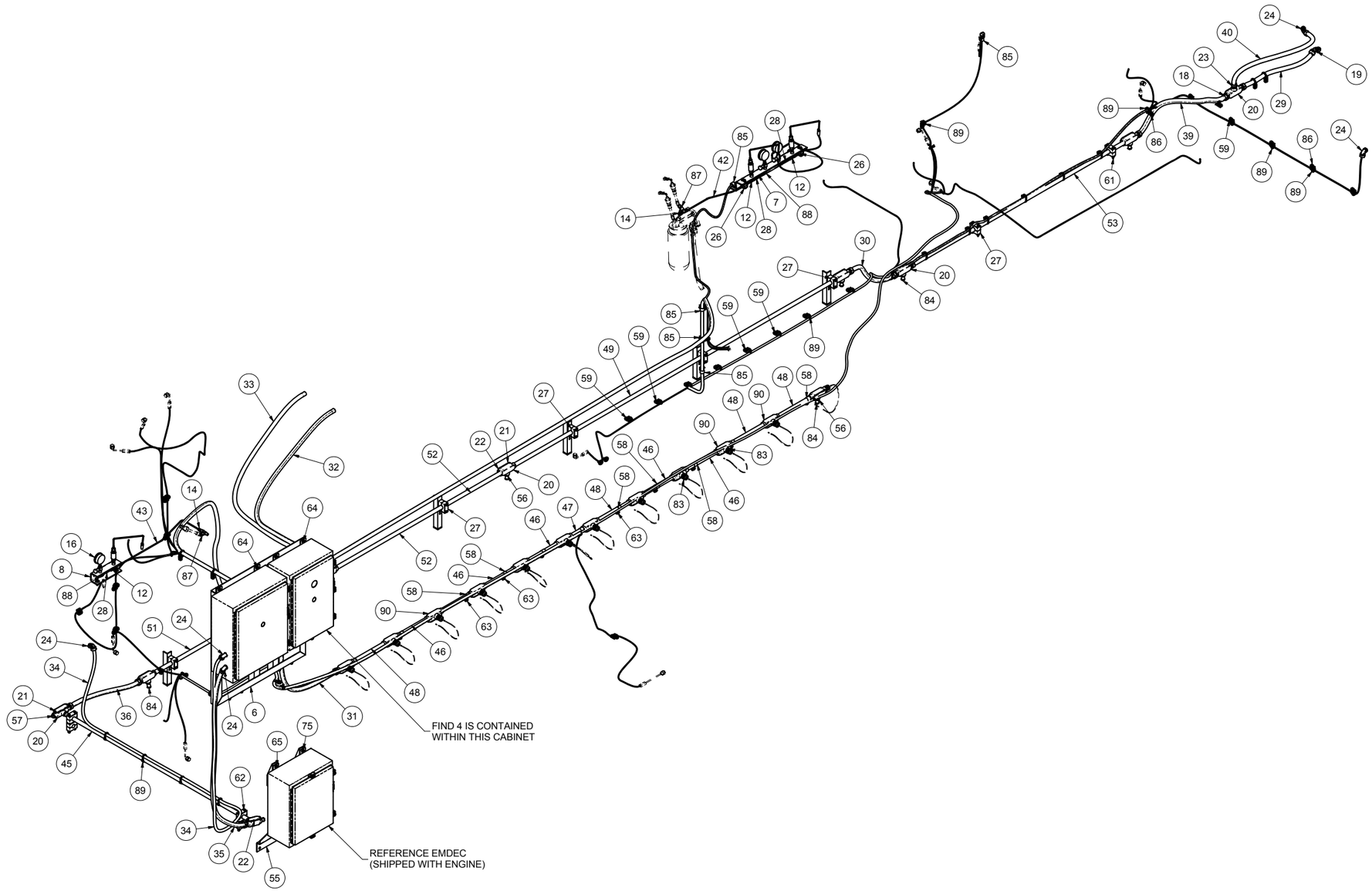

UNLESS OTHERWISE SPECIFIED
ALL DIMENSIONS ARE IN INCHES.
DIMS IN [] ARE IN mm, AND
ARE FOR REFERENCE ONLY.

TOLERANCES UNLESS NOTED OTHERWISE
.X = ± .1
.XX = ± .06
.XXX = ± .005

ANGLES = ± .5°

DRAWN	B. LUTZ	6/5/2009
CHECKED	M. AALY	6/15/2009
PROJ ENG	C. HUELSMAN	6/15/2009

THIRD ANGLE PROJECTION

STEWART & STEVENSON LLC

TITLE
INSTALLATION, ELECTRICAL &
MECHANICAL INSTRUMENTATION,
DM3580EG7C-T2

SIZE	CAGE CODE	DWG NO	REV
D	81381	26110762	A

SCALE: NTS FILE: 26110762.idw SHEET 3 OF 3

REVISION HISTORY					
REV	DESCRIPTION	DESIGNER	CHECKED BY	ENGINEER	APP. DATE
-	INITIAL RELEASE PER ECN 32076	M.A.	MIKE A.	MIKE A.	01/30/2009
A	REVISED PER ECO-000854	M.A.	IOAN B.	MIKE A.	03/31/2009
B	REVISED PER ECO-001546	M.A.	IOAN B.	MIKE A.	07/10/2009
C	REVISED PER ECO-001738	M.A.	IOAN B.	MIKE A.	08/4/2009

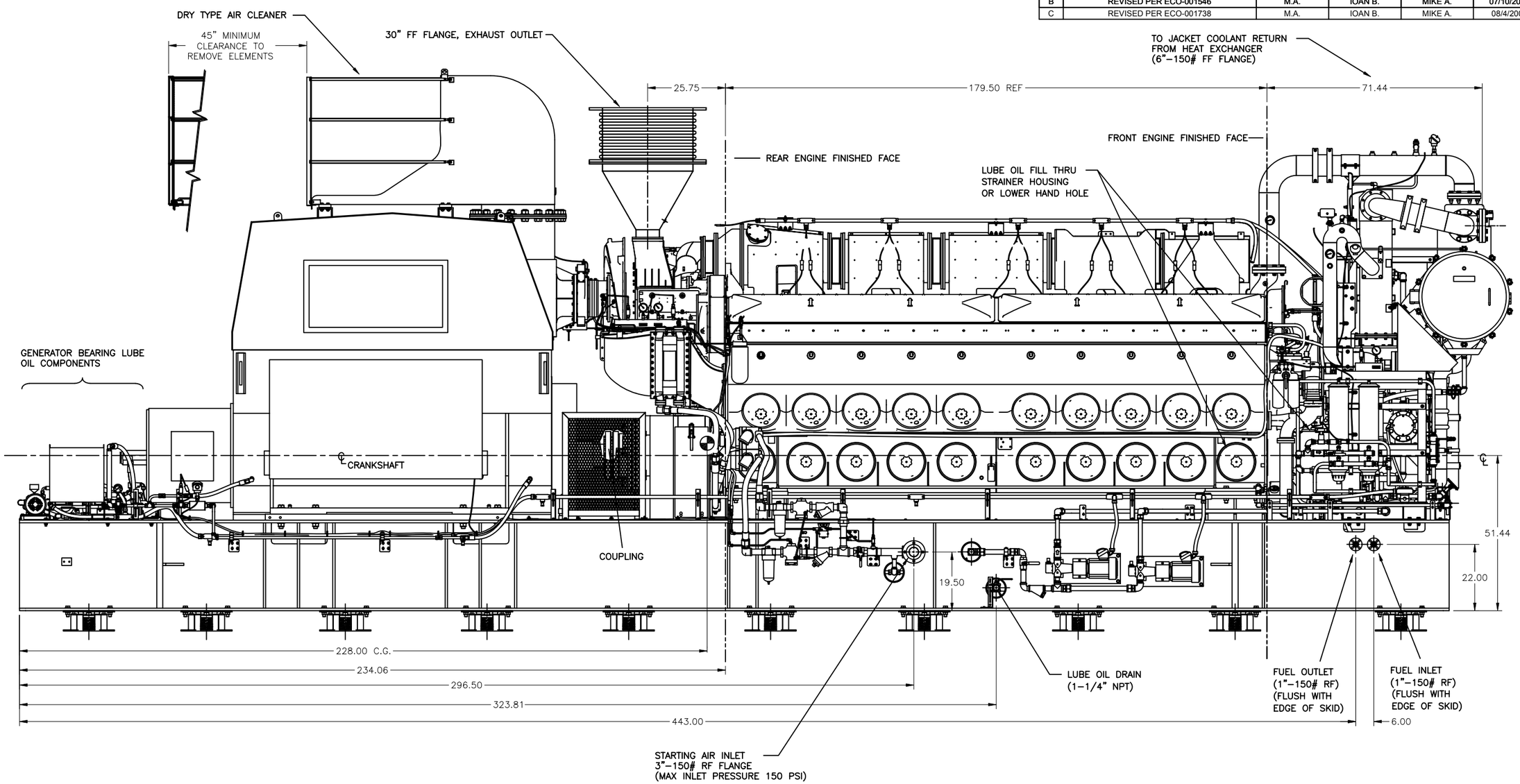

NOTES :

1– APPROXIMATE WEIGHTS:
WET: 137,800 LBS
DRY: 133,000 LBS
2– UNIT HAS NEGLIGIBLE DYNAMIC LOADING.
3– TOLERANCES: 0.XX = 0.25", 0.XXX = 0.125"

UNLESS OTHERWISE SPECIFIED ALL DIMENSIONS ARE IN INCHES. DIMS IN [] ARE IN mm, AND ARE FOR REFERENCE ONLY.

TOLERANCES UNLESS NOTED OTHERWISE
.X = ± .1
.XX = ± .06
.XXX = ± .005

ANGLES = ± .5°

DRAWN	MIKE A.	01/30/2009
CHECKED	IOAN B.	01/30/2009
PROJ ENG	MIKE A.	01/30/2009

THIRD ANGLE PROJECTION

STEWART & STEVENSON LLC

TITLE: GENERAL ARRANGEMENT AND INSTALLATION DRAWING DM3580EG7C-T2 GENERATOR SET

SIZE	CAGE CODE	DWG NO	REV
D	81381	26110888	C

SCALE: 1/16 FILE: 261108881.dwg SHEET 1 OF 5

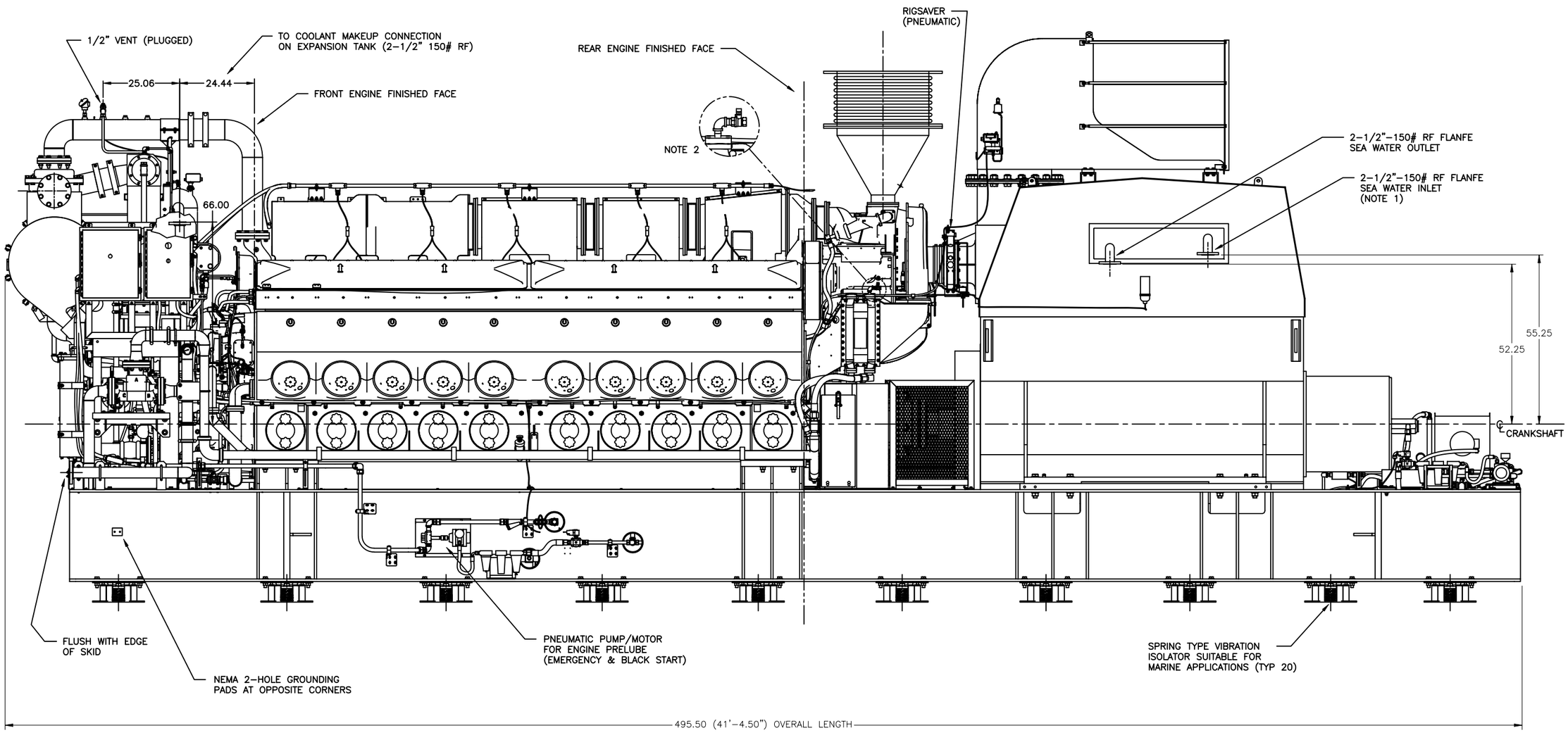

NOTES :

1- MAX SEA WATER INLET TEMPERATURE: 90 F
MAX SEA WATER OUTLET TEMPERATURE: 97 F
FLOW RATE: 160 GPM
PRESSURE DROP: 4 PSI
DESIGN PRESSURE: 87 PSI

2- DURING INITIAL STARTUP, USE THIS VALVE TO VENT ANY TRAPPED AIR, AND OCCASIONALLY THEREAFTER. (TYPICAL BOTH SIDES)

STEWART & STEVENSON LLC

TITLE: GENERAL ARRANGEMENT AND INSTALLATION DRAWING DM3580EG7C-T2 GENERATOR SET

SIZE	CAGE CODE	DWG NO	REV
D	81381	26110888	C

SCALE: 1/16 FILE: 26110888.dwg SHEET 2 OF 5

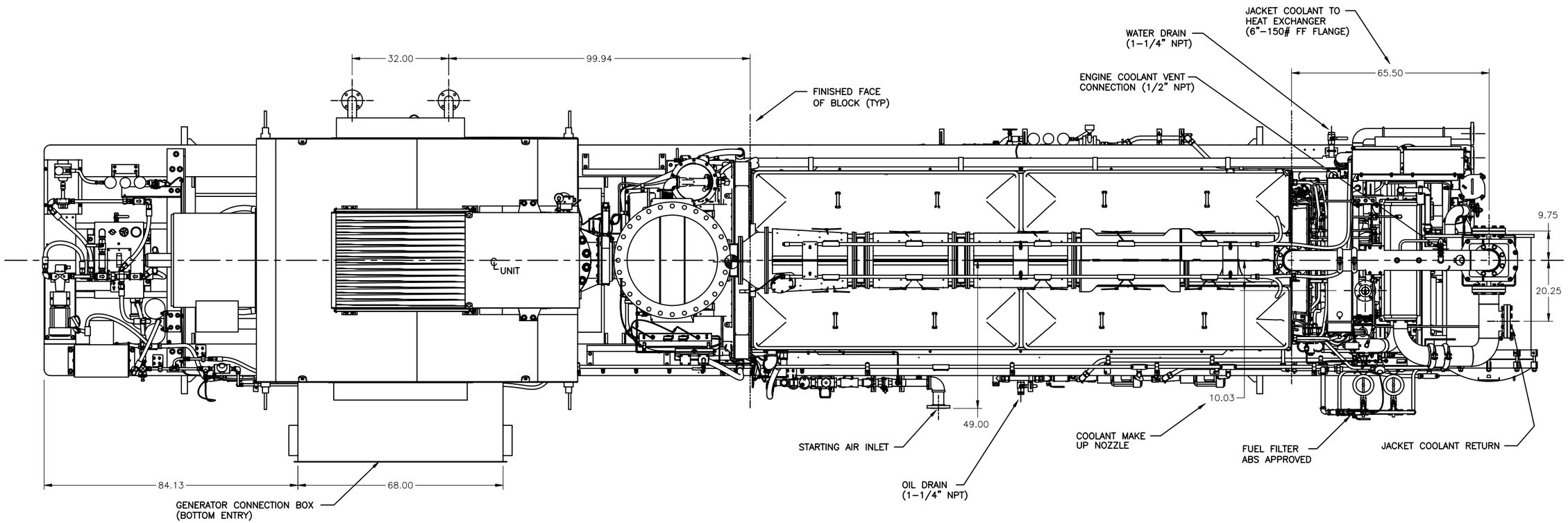

NOTES :

1- COOLING SYSTEM DATA:

AFTERCOOLER (AC) SIDE:
SEA WATER FLOW RATE 700 GPM
MAX SEA WATER INLET TO HEAT EXCHANGER: 90 F, AND 101 F OUTLET
TUBE SIDE (SEA WATER) PRESSURE DROP: 3 PSI PLUS PIPING
HEAT EXCHANGER SHELL SIDE (AC) FLOW RATE: MAX 300 GPM
SHELL SIDE PRESSURE DROP: 2.6 PSI PLUS PIPING
AC INLET TEMPERATURE TO HEAT EXCHANGER: 141 F
AC OUTLET TEMPERATURE FROM HEAT EXCHANGER: 115 F

JACKET WATER (JW) SIDE:
SEA WATER FLOW RATE: 700 GPM (FROM AC HEAT EXCHANGER)
SEA WATER INLET TO HEAT EXCHANGER: 101 F, AND 128.7 F OUTLET
TUBE SIDE (SEA WATER) PRESSURE DROP: 2.9 PSI PLUS PIPING
HEAT EXCHANGER SHELL SIDE (JW) FLOW RATE: MAX 1200 GPM
SHELL SIDE PRESSURE DROP: 6.9 PSI PLUS PIPING
JW INLET TEMPERATURE TO HEAT EXCHANGER: 190 F
JW OUTLET TEMPERATURE FROM HEAT EXCHANGER: 173.5 F

STEWART & STEVENSON LLC

TITLE
GENERAL ARRANGEMENT AND
INSTALLATION DRAWING
DM3580EG7C-T2 GENERATOR SET

SIZE	CAGE CODE	DWG NO	REV
D	81381	26110888	C

SCALE: 1/16 FILE: 26110888.dwg SHEET 3 OF 5

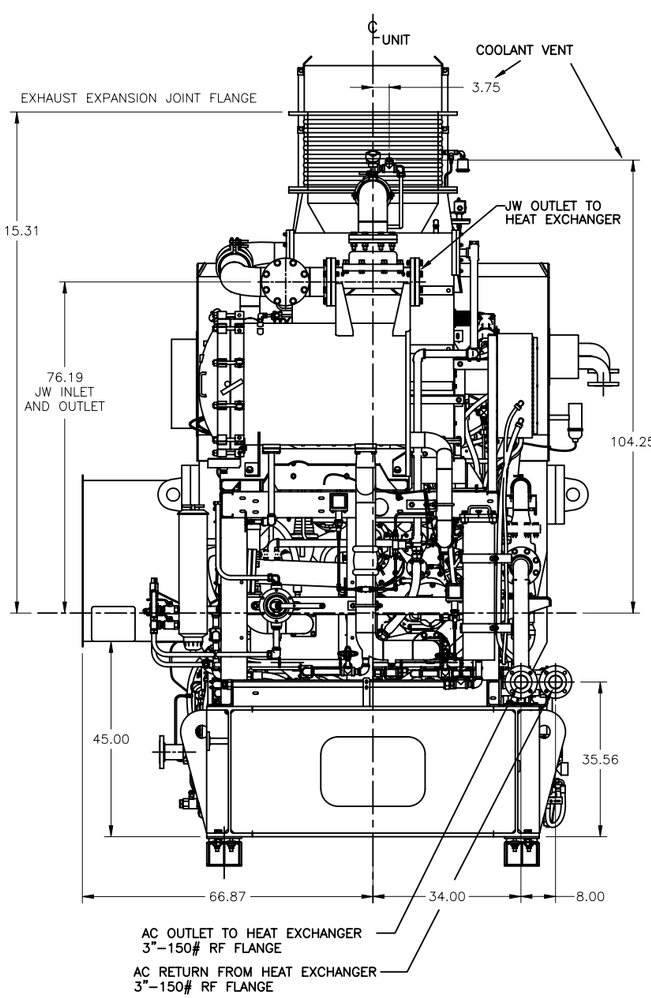

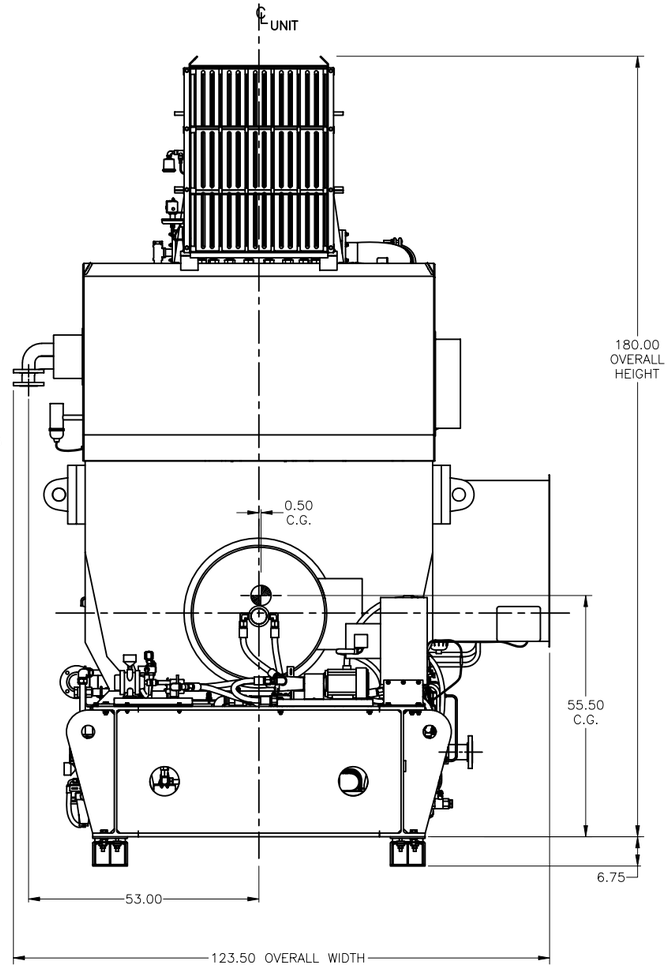

"A"	"B"
6 TO 7 FEET	2 FEET
7 TO 8 FEET	2–1/4 FEET
8 TO 9 FEET	2–1/2 FEET

SUGGESTED DIMENSIONS SHOWN IN THE TABLE FOR LOCATING CHAIN FALL MAY HAVE TO BE ADJUSTED TO ACCOMODATE AVAILABLE HEIGHT.

DIMENSIONS DO NOT TAKE INTO CONSIDERATION LENGHT OF CHAIN FALL WHICH WILL DETERMINE MONORAIL HEIGHT LOCATION.

PROPER ANGLE FOR REMOVING OR INSTALLING POWER ASSEMBLIES IS ESTABLISHED BY MAINTAINING THE PROPER RELATIONSHIP BETWEEN "A" AND "B" DIMENSIONS.

ALL CLEARANCE DIMENSIONS ARE EXCLUSIVE OF LIFTING TACKLE

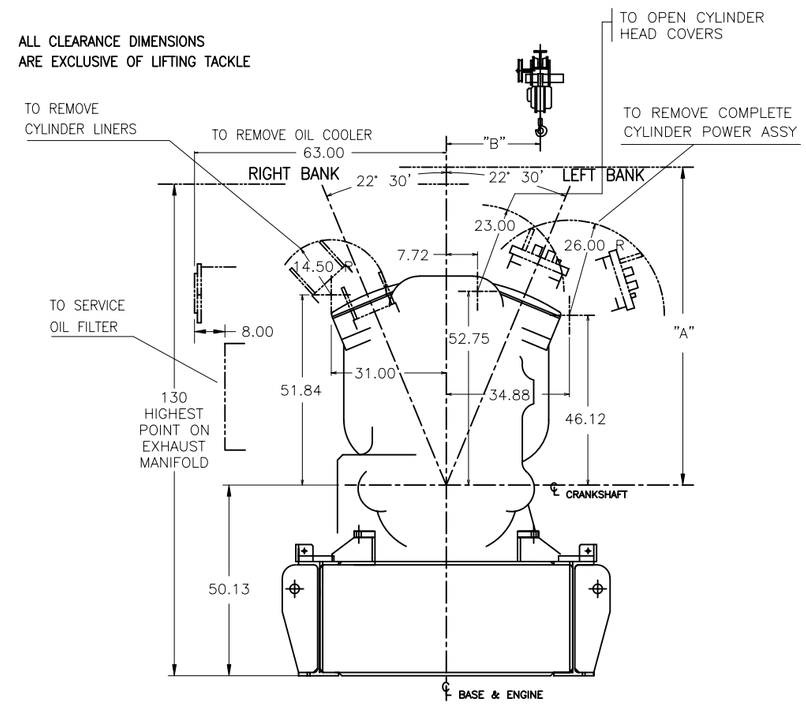

CLEARANCE REQUIRED TO SERVICE ENGINE

NOT TO SCALE

NOTES :

1– ALL 0.XX DIMENSIONS HAVE ±0.25" TOLERANCE.

STEWART & STEVENSON LLC

TITLE: GENERAL ARRANGEMENT AND INSTALLATION DRAWING DM3580EG7C-T2 GENERATOR SET

SIZE	CAGE CODE	DWG NO	REV
D	81381	26110888	C

SCALE: 1/16 FILE: 26110888.dwg SHEET 4 OF 5

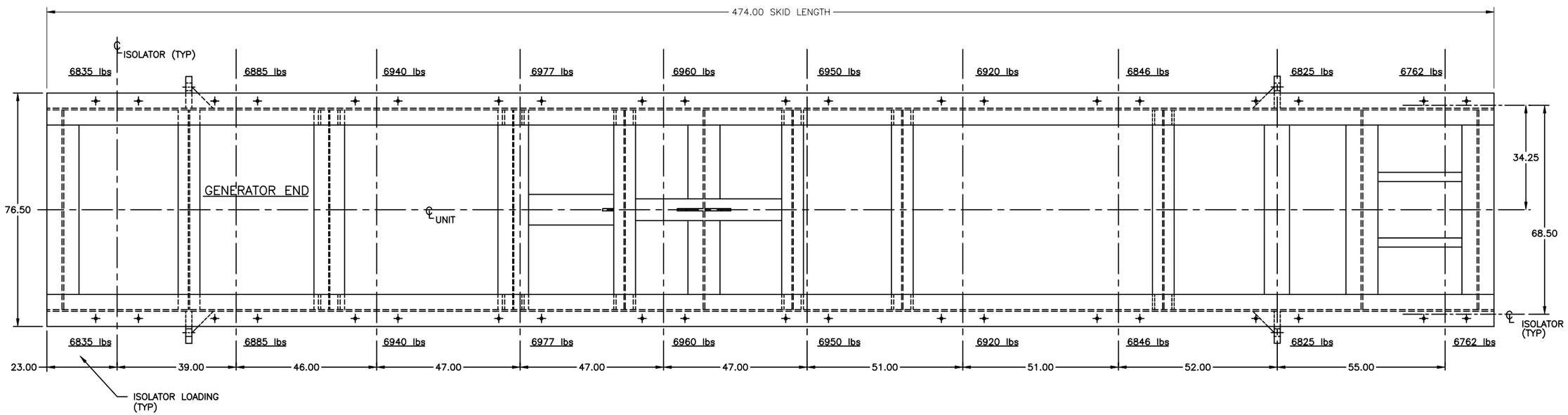

SKID FOOT PRINT

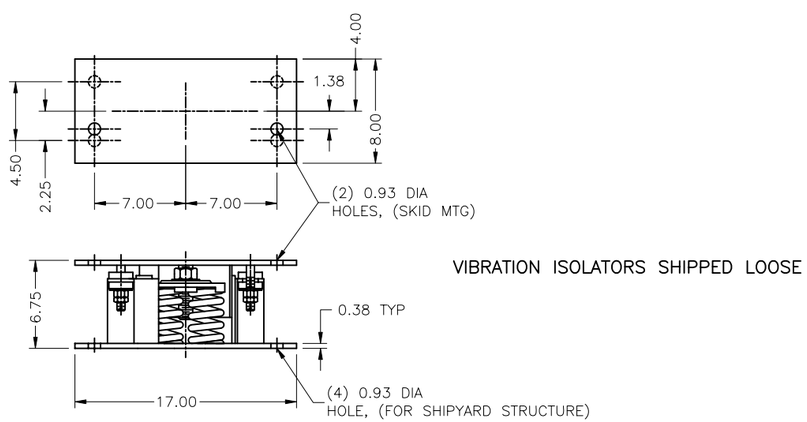

VIBRATION ISOLATORS SHIPPED LOOSE

ISOLATOR FOOT PRINT
ENLARGE 3X

NOTES :

1– ALL DIMENSIONS HAVE ±0.25" TOLERANCE.

STEWART & STEVENSON LLC

TITLE
GENERAL ARRANGEMENT AND
INSTALLATION DRAWING
DM3580EG7C-T2 GENERATOR SET

SIZE	CAGE CODE	DWG NO	REV
D	81381	26110888	C

SCALE: 1/16 FILE: 26110888.dwg SHEET 5 OF 5

REVISION				
ZONE	LTR	DESCRIPTION	DATE	APPROVED
	–	INITIAL RELEASE PER ECO–000730	03/12/09	MA
	A	REVISED PER ECO–001546	07/21/09	MA
	B	REVISED PER ECO–003777	05/13/10	MA

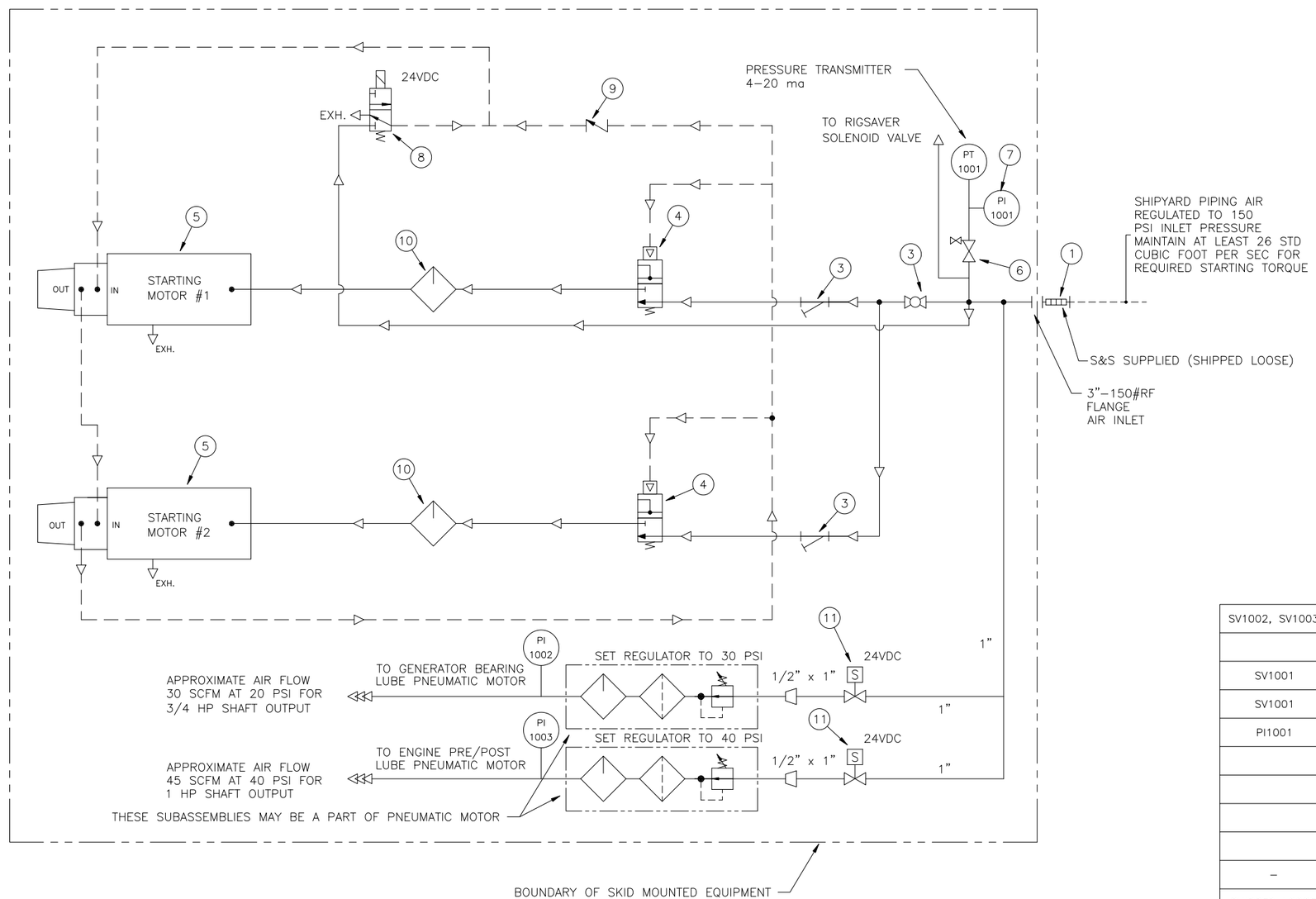

LEGEND

- - - -	PILOT AIR TUBING BY S&S
———	PIPING/TUBING FURNISHED BY S&S
	INTERSECTION / CONNECTION
	FLOW INDICATOR (PNEUMATIC)
	3-WAY SELECTOR VALVE
	AIR RELAY VALVE
TI 2301	LINE MOUNTED TEMPERATURE INDICATOR
	WYE-STRAINER
	GAUGE CONNECTION - 1/4 IN. NPTI
	BALL VALVE
	FLEXIBLE CONNECTION
	PIPE FLANGE
PI 2301	LINE MOUNTED PRESSURE INDICATOR
S	SOLENOID VALVE

COMMENTS	NOMENCLATURE OR DESCRIPTION	MATERIAL/SPECIFICATION	ITEM NO.
SV1002, SV1003	VALVE	SOLENOID, 1", 24VDC	11
	LUBRICATOR	IN–LINE	10
SV1001	VALVE	CHECK, 1/4"	9
SV1001	VALVE	SOLENOID	8
PI1001	GAUGE, PRESSURE	STARTING AIR, 0–400 PSIG	7
	VALVE	BLOCK & BLEED, 1/4"	6
	MOTOR, AIR	STARTING, 90 PSI LOW PRESSURE STARTER	5
	VALVE	RELAY, 1–1/2" NPT	4
	STRAINER	1–1/2" NPT, 40 MESH, REINFORCED	3
–	VALVE	BLOCK, 1–1/2"	2
SHIPPED LOOSE	METAL HOSE	3"–150# RF FLANGES X 18" LONG	1

PARTS LIST

NOTES:

1– DASHED LINES INSIDE BOUNDARY REPRESENTS PIPING PILOT AIR.
B 2– APPROXIMATE AIR FLOW RATE: 26 STANDARD CUBIC FOOT PER SECOND.
3– AIR SUPPLY PRESSURE: 150 PSI AT REQUIRED FLOW RATE.
B 4– APPROXIMATE FREE AIR USAGE PER START: 133 CUBIC FEET

UNLESS OTHERWISE SPECIFIED ALL DIMENSIONS ARE IN INCHES. DIMS IN [] ARE IN mm, AND ARE FOR REFERENCE ONLY.

TOLERANCES UNLESS NOTED OTHERWISE
.X = ± .1
.XX = ± .06
.XXX = ± .005

ANGLES = ± .5°

DRAWN	MA	02/09
CHECKED	BMR	02/09
PROJ ENG	MA	02/09

THIRD ANGLE PROJECTION

STEWART & STEVENSON LLC

TITLE
SCHEMATIC, AIR START SYSTEM
DM3580EG7CT2 GENERATOR SET

SIZE	CAGE CODE	DWG NO	REV
D	81381	26110889	B

SCALE: FILE: SHEET 1 OF 1

RELEASED

REVISION				
ZONE	LTR	DESCRIPTION	DATE	APPROVED
	–	INITIAL RELEASE PER ECO–000730	03/12/09	MA
	A	REVISED PER ECO–001546	07/21/09	MA

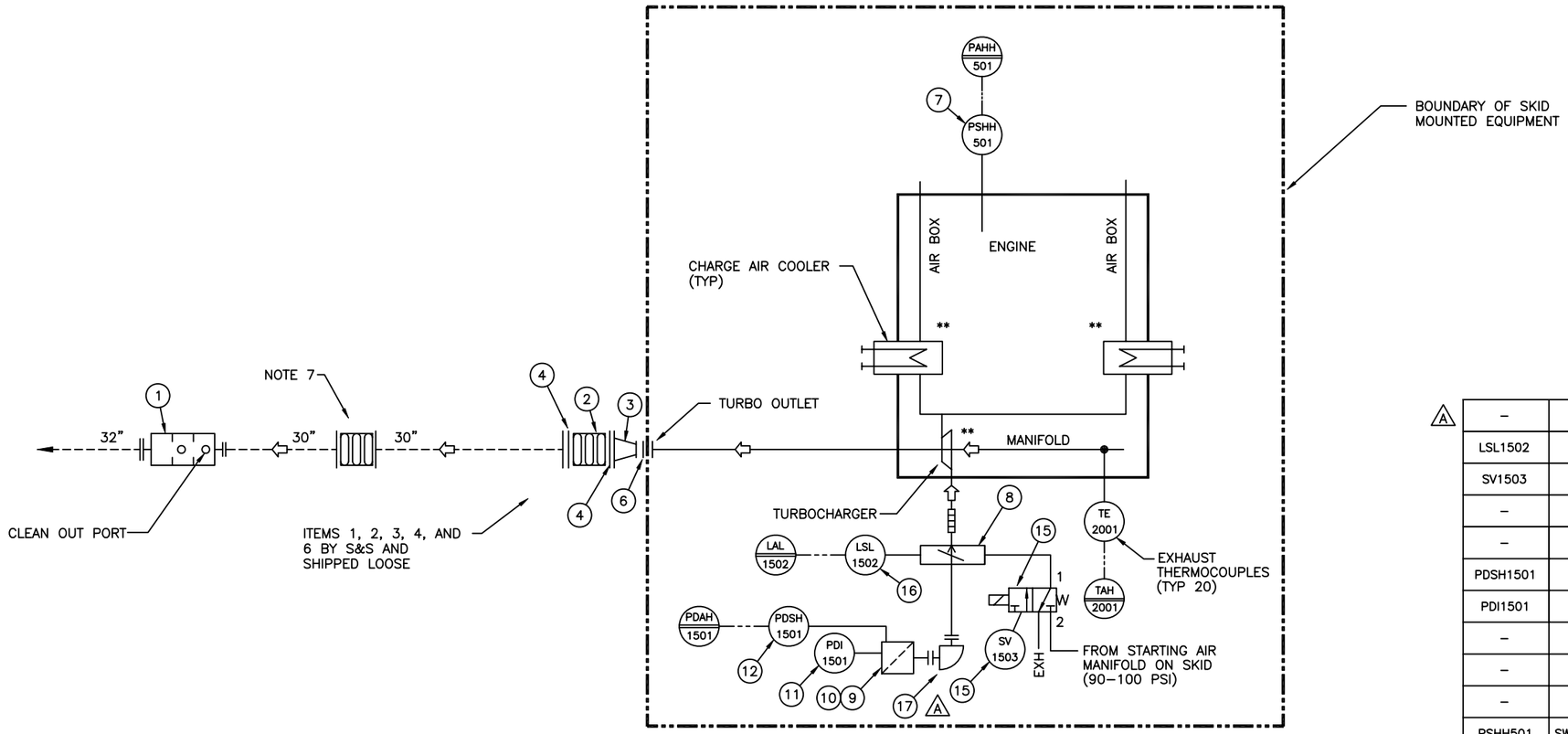

LEGEND :

TI	LINE MOUNTED THERMOMETER
VSH	VACUUM SWITCH
TT	TEMPERATURE TRANSMITTER
TE	TEMPERATURE ELEMENT (RTD OR THERMOCOUPLE)
	BALL VALVE, NORMALLY CLOSED
	BALL VALVE, NORMALLY OPEN
	FLEXIBLE METAL HOSE CONNECTION
XXX	ANNUNCIATED IN CONTROL PANEL
XXX	GAUGE PANEL MOUNTED INSTRUMENT
	INTERFACE – NPT
	INTERFACE – FLANGED

PARTS LIST

COMMENTS	NOMENCLATURE OR DESCRIPTION	MATERIAL/SPECIFICATION	ITEM NO.
A –	ADAPTER	AIR TURNING BOX, ATTENUATED	17
LSL1502	SWITCH, LIMIT	VALVE POSITION (INTEGRAL WITH ITEM 8)	16
SV1503	VALVE	SOLENOID, 24VDC	15
–	–	NOT USED	14
–	–	NOT USED	13
PDSH1501	SWITCH	DIFF PRESSURE HIGH ALARM SET @ 14" W.C.	12
PDI1501	GAUGE	SERVICE INDICATOR	11
–	ELEMENT	INTAKE AIR FILTER, PLEATED PAPER	10
–	HOUSING	AIR FILTER 15 RC–300 ELEMENTS, OPEN DRY TYPE	9
–	RIGSAVER	OVERSPEED SHUTDOWN, PNEUMATIC	8
PSHH501	SWITCH, PRESSURE	CRANKCASE, HIGH SHUTDOWN	7
SHIP LOOSE	GASKET	RECTANGULAR, TURBO OUTLET	6
–	–	NOT USED	5
SHIP LOOSE	KIT	BOLT, NUTS AND GASKET, 30" EXHAUST FLANGE	4
SHIP LOOSE	ADAPTER	VERTICAL, 30"–125# FLANGE	3
SHIP LOOSE	CONNECTION	EXPANSION JOINT, 30" FLG.x18.00"LG. NO LINER	2
SHIP LOOSE	SILENCER	EXHAUST, 30"INLET x 32"OUTLET FLG. PD = 1.20" W.C., SPARK ARRESTOR	1

NOTES:

A

1– INTAKE AIR FLOW RATE : 15,455 ft^3/min AT 14.7 PSI AND 115 °F, @5,500HP (5,500 HP IS 10% OVERLOAD RATING).
2– EXHAUST GAS FLOW RATE : 34,650 ft^3/min AT 650 °F. @5,500HP.
3– MAXIMUM EXHAUST BACK PRESSURE EXTERNAL TO ENGINE : 6" H2O
4– DASHED LINES OUTSIDE BOUNDARY REPRESENT PIPING BY OTHERS.
5– APPROX. HEAT RADIATION TO ENGINE ROOM PER UNIT : 26,400 BTU/min @5,500HP.
6– ITEMS MARKED WITH ** ARE INTERNAL TO OR FURNISHED AS A PART OF ENGINE ORDER.
7– DESIGN AND APPLICATION OF THIS ITEM DEPENDS ON EXHAUST PIPING CONFIGURATION, AND IS RESPONSIBILITY OF THE INSTALLER.

UNLESS OTHERWISE SPECIFIED ALL DIMENSIONS ARE IN INCHES. DIMS IN [] ARE IN mm, AND ARE FOR REFERENCE ONLY.

TOLERANCES UNLESS NOTED OTHERWISE
.X = ± .1
.XX = ± .06
.XXX = ± .005

ANGLES = ± .5°

DRAWN	MA	02/09
CHECKED	IB	02/09
PROJ ENG	MA	02/09

THIRD ANGLE PROJECTION

STEWART & STEVENSON LLC

TITLE
SCHEMATIC
INTAKE AIR, EXHAUST SYSTEMS
DM3580EG7CT2 GENERATOR SET

SIZE	CAGE CODE	DWG NO	REV
D	81381	26110890	A

SCALE: FILE: SHEET 1 OF 1

REVISION HISTORY					
REV	DESCRIPTION	DESIGNER	CHECKED BY	ENGINEER	APP. DATE
-	INITIAL RELEASE PER ECO-000730	M.A.	B. RAMIREZ	M. AALY	03/12/2009
A	REVISED PER ECO-001546	M.A.	B. RAMIREZ	M. AALY	07/21/2009

NOTES :

1– ALL PIPING LINES OUTSIDE THE BOUNDARY BY OTHERS.
2– ITEMS MARKED WITH ** ARE INTERNAL TO OR FURNISHED WITH VENDOR EQUIPMENT.
3– COOLING EQUIPMENT MUST BE INSTALLED AT A LEVEL LOWER THAN EXPANSION TANK LOW LEVEL LINE. RECOMMEND 17 MIN–27 MAX FT FROM BOTTOM OF TANK TO CRANKSHAFT CENTERLINE.
4– FLANGED INTERFACE CONNECTIONS REQUIRE APPROPRIATELY DESIGNED GASKET (BY OTHERS).
5– SEA WATER USED FOR COOLING MUST BE CLEAN AND FILTERED.
6– FOR CONTINUOUS AC CIRCUIT VENTING, CONNECT TO POINT A. OTHERWISE OPEN THE VALVE OCCASIONALLY TO VENT MANUALLY.

LEGEND :

TI	LINE MOUNTED THERMOMETER
PT	PRESSURE TRANSMITTER
TT	TEMPERATURE TRANSMITTER
TE	TEMPERATURE ELEMENT (RTD OR THERMOCOUPLE)
	BALL VALVE, NORMALLY CLOSED
	BALL VALVE, NORMALLY OPEN
	FLEXIBLE METAL HOSE CONNECTION
	WATER PUMP
TS	THERMOSTAT
XXX	ANNUNCIATED IN CONTROL PANEL
XXX	GAUGE PANEL MOUNTED INSTRUMENT
	INTERFACE – NPT
	INTERFACE – FLANGED
	INTERFACE – QUICK DISCONNECT
	HOSE LINE
	NORMALLY CLOSED VALVE
	THERMOWELL

PARTS LIST			
–	TANK ASSEMBLY	COOLANT EXPANSION, AFTERCOOLER	17
–	VALVE	THERMOSTATIC, 3"–150# FF FLANGES, 115 °F	16
SHIPPED LOOSE	HEAT EXCHANGER	AFTERCOOLER	15
SHIPPED LOOSE	METAL HOSE	2 1/2"–150# FF FLANGES X 18" LG, BRAIDED	14
SHIPPED LOOSE	METAL HOSE	3"–150# FF FLANGES X 18" LG, BRAIDED	13
SHIPPED LOOSE	TANK	ASSEMBLY, EXPANSION, JACKET WATER	12
SHIPPED LOOSE	METAL HOSE	6"–150# FF FLANGES X 18" LONG, BRAIDED	11
TT2501	TRANSMITTER	SENSOR, TEMPERATURE, 4–20 mA, 0–400 °F	10
TI2500	GAUGE	TEMPERATURE, AFTERCOOLER	9
LSL2501	GAUGE	LEVEL, FLUID, WITH LOW ALARM SWITCH	8
–	HEATER	IMMERSION, 15 KW, 3 PH, 480 VAC	7
TS2501	THERMOSTAT	SENSOR, TEMPERATURE, SET 155 °F	6
PS2500	SWITCH, PRESSURE	LOW ALARM, JACKET WATER (EMDEC OUTPUT)	5
–	VALVE	BALL, 1–1/4" NPT, BRONZE	4
TI2503	GAUGE	TEMPERATURE, 50–300 °F	3
–	VALVE	THERMOSTATIC, 6"–150# FF FLANGES, 195 °F	2
SHIPPED LOOSE	HEAT EXCHANGER	JACKET WATER	1
COMMENTS	NOMENCLATURE OR DESCRIPTION	MATERIAL/SPECIFICATION	FIND

UNLESS OTHERWISE SPECIFIED ALL DIMENSIONS ARE IN INCHES. DIMS IN [] ARE IN mm, AND ARE FOR REFERENCE ONLY.

TOLERANCES UNLESS NOTED OTHERWISE
.X = ± .1
.XX = ± .06
.XXX = ± .005

ANGLES = ± .5°

DRAWN	M. AALY	02/11/2009
CHECKED	I. BOERU	02/12/2009
PROJ ENG	M. AALY	02/14/2009

THIRD ANGLE PROJECTION

STEWART & STEVENSON LLC

TITLE: SCHEMATIC, COOLING SYSTEM DM3580EG7CT2 GENERATOR SET

SIZE	CAGE CODE	DWG NO	REV
D	81381	26110892	A

SCALE: N/A FILE: 26110892.dwg SHEET 1 OF 2

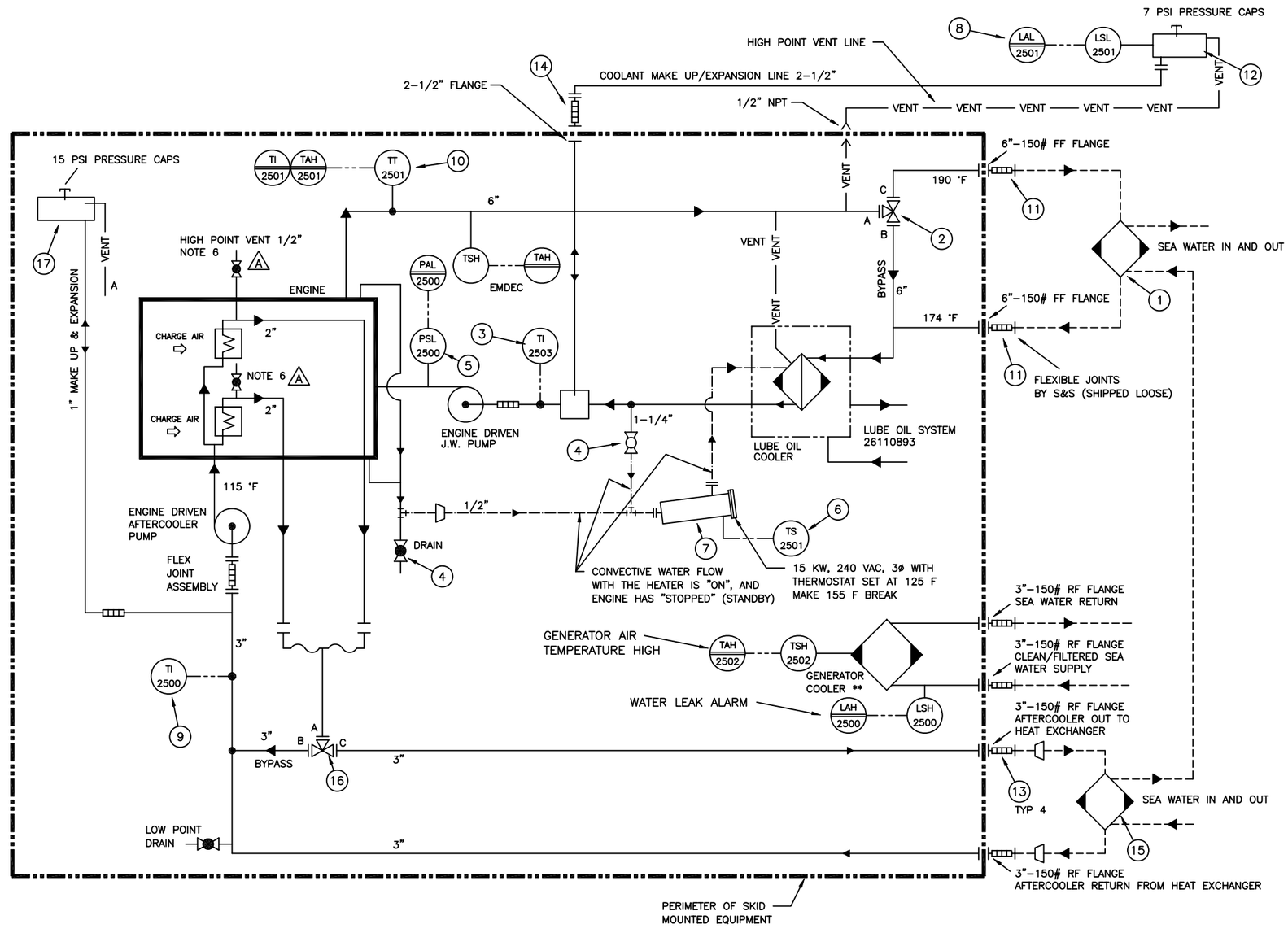

ENGINE COOLING SYSTEM DATA:

AFTERCOOLER (AC) SIDE:
SEA WATER FLOW RATE 700 GPM
MAX SEA WATER INLET TO HEAT EXCHANGER: 90 F
MAX SEA WATER OUTLET FROM HEAT EXCHANGER: 101 F A
TUBE SIDE (SEA WATER) PRESSURE DROP: 3 PSI PLUS PIPING
HEAT EXCHANGER SHELL SIDE (AC) FLOW RATE: MAX 300 GPM
SHELL SIDE PRESSURE DROP: 2.6 PSI PLUS PIPING
AC INLET TEMPERATURE TO HEAT EXCHANGER: 141 F
AC OUTLET TEMPERATURE FROM HEAT EXCHANGER: 115 F
HEAT EXCHANGED: 3,849,120 BTU/HR (OVERSIZED RATING) A

JACKET WATER (JW) SIDE:
SEA WATER FLOW RATE: 700 GPM (FROM AC HEAT EXCHANGER)
SEA WATER INLET TO HEAT EXCHANGER: 101 F
SEA WATER OUTLET FROM HEAT EXCHANGER: 128.7 F A
TUBE SIDE (SEA WATER) PRESSURE DROP: 2.9 PSI PLUS PIPING
HEAT EXCHANGER SHELL SIDE (JW) FLOW RATE: MAX 1200 GPM
SHELL SIDE PRESSURE DROP: 6.9 PSI PLUS PIPING
JW INLET TEMPERATURE TO HEAT EXCHANGER: 190 F
JW OUTLET TEMPERATURE FROM HEAT EXCHANGER: 173.5 F
HEAT EXCHANGED: 9,580,032 BTU/HR (OVERSIZED RATING) A

GENERATOR COOLER DATA

SEA WATER FLOW RATE ---------- 150 GPM A
MAX SEA WATER TEMPERATURE IN--------- 90 °F
SEA WATER TEMPERATURE OUT---------- 97 °F
DESIGN PRESSURE ---------- 87 PSIG
THERMAL INPUT (ESTIMATE)---------- 154 KW A
COOLER PRESSURE DROP---------- 3.8 PSI A

ALL VALUES GIVEN ABOVE ARE NOMINAL VALUES.

STEWART & STEVENSON LLC

TITLE
SCHEMATIC, COOLING SYSTEM
DM3580EG7CT2 GENERATOR SET

SIZE	CAGE CODE	DWG NO	REV
D	81381	26110892	A

SCALE: NTS FILE: 26110892.dwg SHEET 2 OF 2

NOTES :

1– LUBE OIL IS HEATED BY IMMERSION HEATER CIRCULATING WATER THROUGH LUBE OIL COOLER WHERE TEMPERATURE IS MAINTAINED AS REQUIRED.
2– LUBE OIL CONSUMPTION: 0.45 GALLONS/HOUR @ RATED LOAD
3– BOTH ELECTRIC MOTOR DRIVEN PUMPS (ITEMS 4 & 5) SHOULD BE STARTED AND OPERATED CONTINUOUSLY AS LONG AS THE UNIT IS IN STANDBY MODE. THEY SHOULD BE DE–ENERGIZED WHEN THE UNIT STARTS TO OPERATE. AIR MOTOR OPERATED PUMP IS A BACKUP FOR BOTH PUMPS.
4– ITEMS MARKED WITH ** ARE INTERNAL TO OR FURNISHED WITH VENDOR EQUIPMENT.
5– SCAVENGING, PISTON COOLING AND MAIN LUBE OIL PUMP STRAINERS ARE INSTALLED IN STRAINER HOUSING LOCATED IN FRONT OF ENGINE. THE DRAIN VALVE IS INSIDE THE STRAINER BOX AND AN INTEGRAL PART OF IT.

REVISION HISTORY

REV	DESCRIPTION	DESIGNER	CHECKED BY	ENGINEER	APP. DATE
-	INITIAL RELEASE PER ECO-000730	M.A.	I. BOERU	M. AALY	03/12/2009
A	REVISED PER ECO-001546	M.A.	B. RAMIREZ	M. AALY	07/21/2009
B	REVISED PER ECO-003777	M.A.	B. RAMIREZ	M. AALY	05/13/2010

LEGEND :

XXX	LINE MOUNTED INSTRUMENT
PT	PRESSURE TRANSMITTER
TT	TEMPERATURE TRANSMITTER
TE	TEMPERATURE ELEMENT (RTD OR THERMOCOUPLE)
	BALL VALVE, NORMALLY CLOSED
	BALL VALVE, NORMALLY OPEN
	FLEXIBLE METAL HOSE CONNECTION
TS	THERMOSTAT
XXX	ANNUNCIATED IN CONTROL PANEL
XXX	GAUGE PANEL MOUNTED INSTRUMENT
	INTERFACE – NPT
	INTERFACE – FLANGED
PI	LINE MOUNTED PRESSURE GAUGE
	"Y" TYPE STRAINER
	GEAR PUMP
	LINE FILTER (STRAINER)
	NEEDLE VALVE
	CHECK OR CHECK/RELIEF VALVE
	PRESSURE RELIEF VALVE
	HOSE LINE
	NORMALLY CLOSED VALVE
	THERMOWELL

PARTS LIST

COMMENTS	NOMENCLATURE OR DESCRIPTION	MATERIAL/SPECIFICATION	ITEM NO.
B	VALVE	CHECK/RELIEF, 1", 20 PSI SPRING	26
	VALVE	CHECK/RELIEF, 1", 30 PSI SPRING	25
PDSH3001	SWITCH	L.O. FILTER DIFFERENTIAL PRESSURE HIGH ALARM	24
TE3001	XDUCER	TEMPERATURE, CRANKSHAFT MAIN BEARINGS	23
P3001	ASSEMBLY, PUMP	AIR MOTOR OPERATED	22
PT3001	TRANSMITTER	PRESSURE, 4–20 mA, 0–200 PSI	21
SHIPPED LOOSE	METAL HOSE	FLEX 1–1/4" NPTM EXP. BELLOWS X 18" LONG	20
	"Y" STRAINER	1–1/4" NPTF, 304 SS SCREEN, 20 MESH	19
PSLL3001	SWITCH	PRESSURE, ALARM SET AT 27 PSI FALLING	18
TT3002	TRANSMITTER	TEMPERATURE, 4–20 mA, 0–400 °F	17
	VALVE	SWING CHECK VALVE ASSY	16
	THERMOWELL	GAUGE, TEMPERATURE	15
TI3001	GAUGE, TEMP.	LUBE OIL 50–300 °F	14
TSH3001	SWITCH, TEMP.	LUBE OIL, HIGH, SET 220 °F	13
	VALVE	GAUGE, NEEDLE, 1/4"	12
	VALVE	1" GATE, NPTF BRONZE	11
LSL3001	SWITCH	LUBE OIL, LOW LEVEL ALARM	10
	VALVE	BALL, 1–1/4" NPTF, W/LATCH LOCK LEVER	9
	VALVE	CHECK/RELIEF, 1" NPTF, 1 PSI	8
PI3003	GAUGE	TURBO SOAKBACK OIL PRESSURE, 0–100 PSI	7
	VALVE	CHECK/RELIEF, 1" NPTF, 75 PSI	6
P3003	ASSEMBLY, PUMP	SOAKBACK PUMP, 6 GPM 3/60/460, 1 HP	5
P3002	ASSEMBLY, PUMP	CIRCULATING. 6 GPM, 3/60/460, 1 HP	4
PSL3002	SWITCH, PRESSURE	PRELUBE, LOW ALARM, SET@ 10 PSIG FALLING	3
PSL3003	SWITCH, PRESSURE	SOAKBACK, LOW ALARM, SET @ 10 PSIG FALLING	2
TSL3001	SWITCH, TEMP.	LUBE OIL, 95°F BREAK, 85 °F MAKE	1

UNLESS OTHERWISE SPECIFIED ALL DIMENSIONS ARE IN INCHES. DIMS IN [] ARE IN mm, AND ARE FOR REFERENCE ONLY.

TOLERANCES UNLESS NOTED OTHERWISE
.X = ± .1
.XX = ± .06
.XXX = ± .005

ANGLES = ± .5°

DRAWN	M. AALY	02/14/2009
CHECKED	I. BOERU	02/15/2009
PROJ ENG	M. AALY	02/16/2009

THIRD ANGLE PROJECTION

STEWART & STEVENSON LLC

TITLE
SCHEMATIC, ENGINE LUBE OIL SYSTEM, DM3580EG7CT2 GENERATOR SET

SIZE	CAGE CODE	DWG NO	REV
D	81381	26110893	B

SCALE: N/A FILE: 26110893.dwg SHEET 1 OF 2

RELEASED

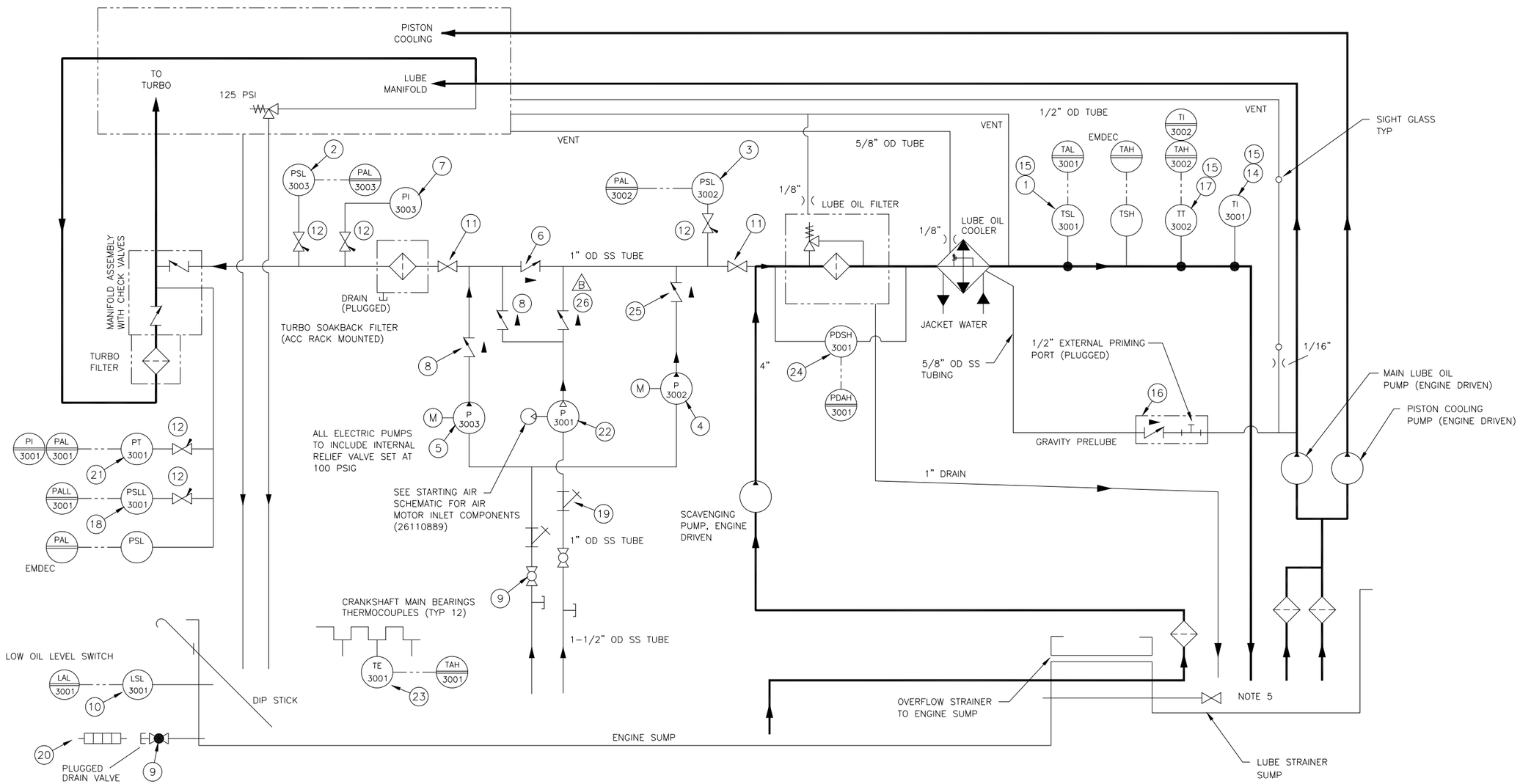

STEWART & STEVENSON LLC

TITLE
SCHEMATIC, ENGINE LUBE OIL SYSTEM, DM3580EG7CT2 GENERATOR SET

SIZE	CAGE CODE	DWG NO	REV
D	81381	26110893	B

SCALE: NTS FILE: 26110893.dwg SHEET 2 OF 2

RELEASED

REVISION				
ZONE	LTR	DESCRIPTION	DATE	APPROVED
	–	INITIAL RELEASE PER ECO–000730	03/12/09	MA

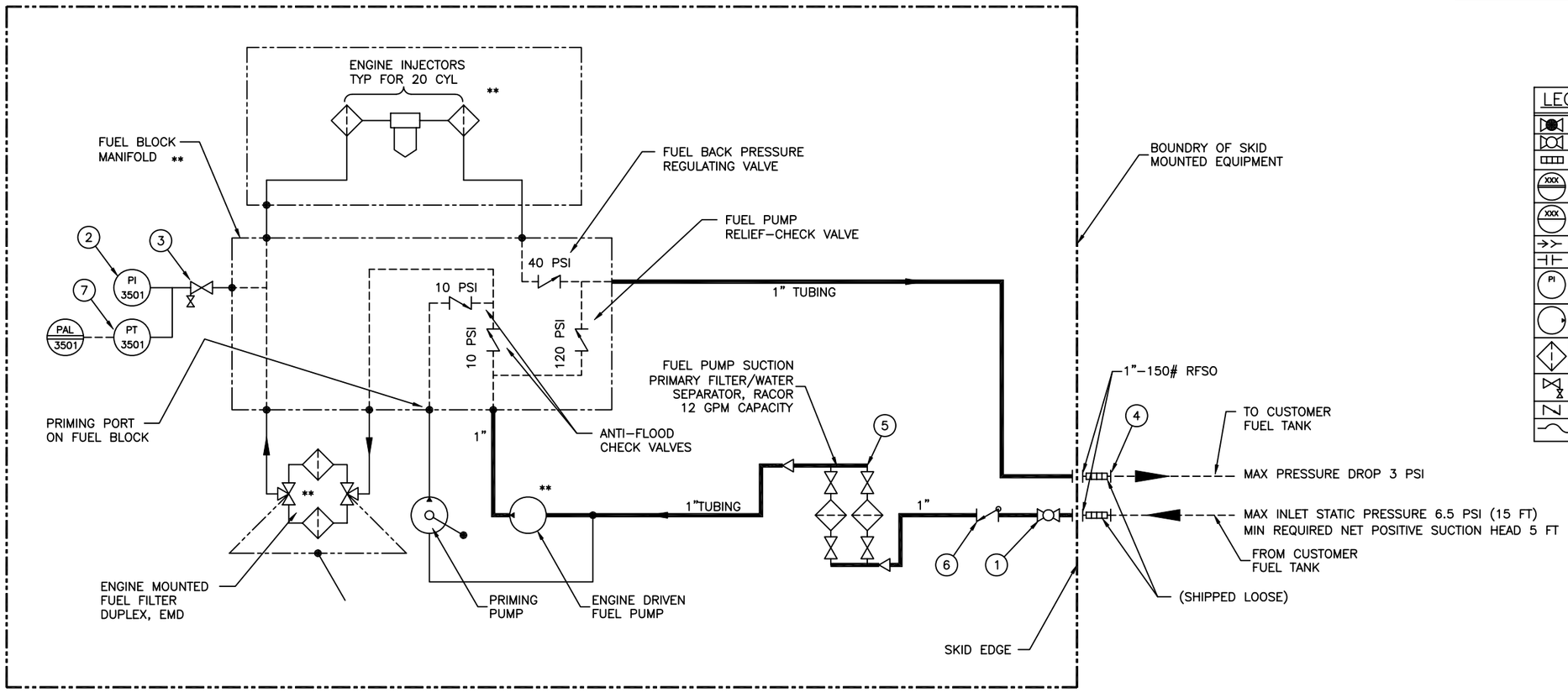

LEGEND :

	BALL VALVE, NORMALLY CLOSED
	BALL VALVE, NORMALLY OPEN
	FLEXIBLE METAL HOSE CONNECTION
XXX	ANNUNCIATED IN CONTROL PANEL
XXX	GAUGE PANEL MOUNTED INSTRUMENT
	INTERFACE – NPT
	INTERFACE – FLANGED
PI	LINE MOUNTED PRESSURE GAUGE
	GEAR PUMP
	LINE FILTER (STRAINER)
	NEEDLE VALVE
	CHECK OR CHECK/RELIEF VALVE
	HOSE LINE

NOTES:

1– NORMAL FUEL FLOW 10 gpm.
2– MAX HEIGHT OF FUEL IN FUEL TANK SHOULD NOT EXCEED 15 FEET ABOVE ENGINE CRANKSHAFT CENTER LINE.
3– FUEL SUPPLY PUMP MAX SUCTION LIFT : 10 FEET
4– ANY VALVE INSTALLED IN FUEL RETURN LINE TO FUEL TANK SHALL BE LOCKED OPEN, EXCEPT DURING MAINTENANCE ISOLATION.
5– DASHED LINE OUTSIDE THE BOUNDARY REPRESENTS PIPING BY OTHERS.
6– ALL TUBING AND FITTINGS MATERIAL SHALL BE 316 STAINLESS.
7– ITEMS MARKED WITH ** ARE INTERNAL TO OR FURNISHED AS A PART OF ENGINE.
8– ALL PIPING/TUBING TO BE CLEAN AND FREE FROM FOREIGN MATTERS, WELD SPATTERS, SCALE AND OTHERS. DO NOT USE GALVANIZED PIPING OR FITTINGS.

PARTS LIST

COMMENTS	NOMENCLATURE OR DESCRIPTION	MATERIAL/SPECIFICATION	ITEM NO.
PT3501	TRANSMITTER	PRESSURE, 0–200 PSI FOR 4–20 MA	7
	VALVE	SWING CHECK, 1" NPT	6
	FILTER	WATER SEPARATOR, DUPLEX, ABS APPROVED	5
SHIPPED LOOSE	METAL HOSE	1"–150# RF FLANGES X 18" LONG	4
	VALVE	BLOCK & BLEED	3
PI3501	GAUGE, PRESSURE	0–200 PSIG	2
	VALVE	BLOCK, 1" NPT	1

UNLESS OTHERWISE SPECIFIED ALL DIMENSIONS ARE IN INCHES. DIMS IN [] ARE IN mm, AND ARE FOR REFERENCE ONLY.

TOLERANCES UNLESS NOTED OTHERWISE
.X = ± .1
.XX = ± .06
.XXX = ± .005
ANGLES = ± .5°

DRAWN	MA	02/09
CHECKED	BMR	02/09
PROJ ENG	MA	02/09

THIRD ANGLE PROJECTION

STEWART & STEVENSON LLC

TITLE
SCHEMATIC, FUEL OIL SYSTEM
DM3580EG7CT2 GEN SET

SIZE	CAGE CODE	DWG NO	REV
D	81381	26110894	–

SCALE: FILE: SHEET 1 OF 1

REVISION HISTORY					
REV	DESCRIPTION	DESIGNER	CHECKED BY	ENGINEER	APP. DATE
-	INITIAL RELEASE PER ECO-000819	M.A.	I. BOERU	M. AALY	03/25/2009
A	REVISED PER ECO-001546	M.A.	B. RAMIREZ	M. AALY	07/21/2009

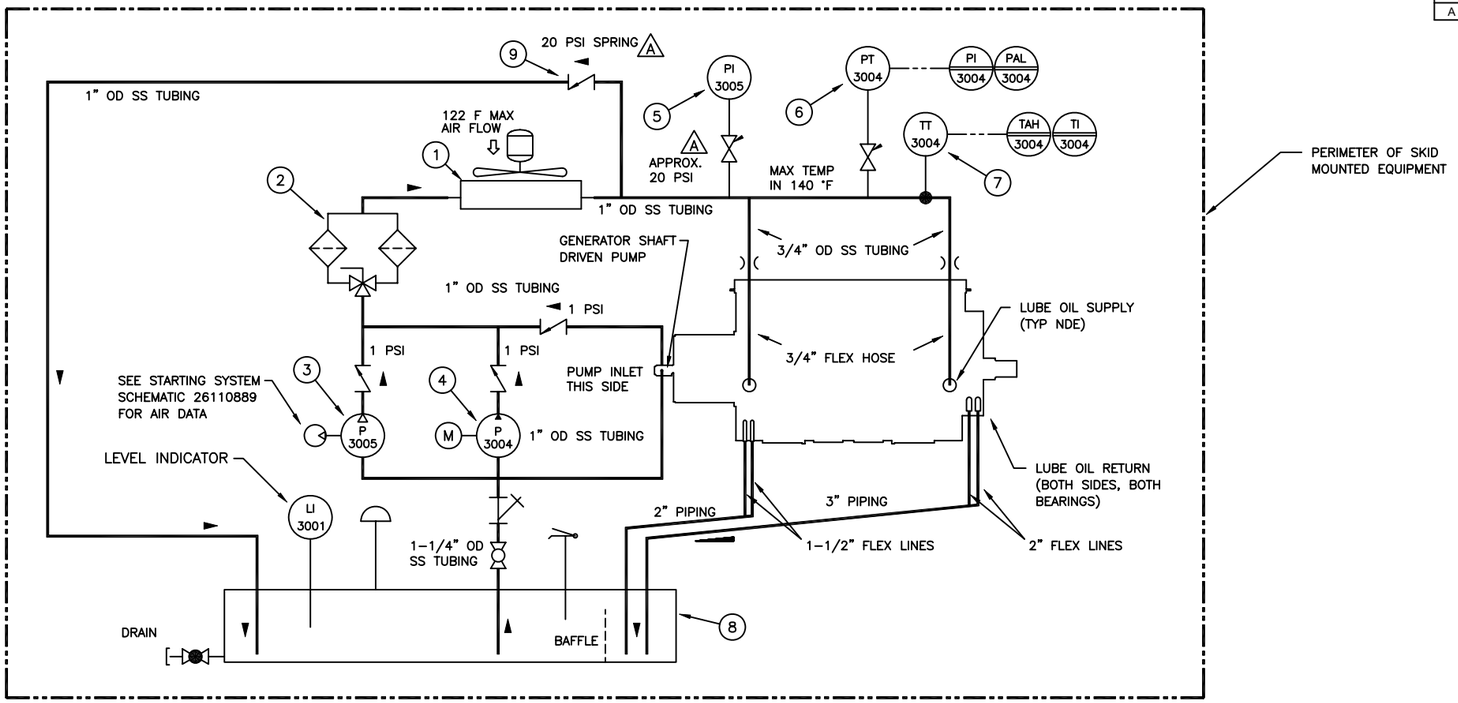

LEGEND :

XXX	LINE MOUNTED INSTRUMENT
PT	PRESSURE TRANSMITTER
TT	TEMPERATURE TRANSMITTER
	BALL VALVE, NORMALLY CLOSED
	BALL VALVE, NORMALLY OPEN
XXX	ANNUNCIATED IN CONTROL PANEL
PI	LINE MOUNTED PRESSURE GAUGE
	"Y" TYPE STRAINER
	GEAR PUMP
	LINE FILTER (STRAINER)
	NEEDLE VALVE
	CHECK OR CHECK/RELIEF VALVE
	THERMOWELL
	NORMAL VENT
	FILL NOZZLE WITH CAP
	ORIFICE

NOTES:

1- GENERATOR BEARING LUBE OIL CONFIRMING TO ISO VG 46 (APPROX. 15 SAE CRANKCASE OIL).
2- FILTRATION MICRON RATING: 20-25 MICRON ELEMENTS.
3- APPROX. OIL FLOW TO DE BEARING: 3.0 GPM
APPROX. OIL FLOW TO NDE BEARING: 0.9 GPM

COMMENTS	NOMENCLATURE OR DESCRIPTION	MATERIAL/SPECIFICATION	ITEM NO.
–	VALVE, CHECK	10 PSI CRACKING PRESSURE	9
–	TANK, OIL	APPROX. 25 GAL.	8
TT3004	TRANSMITTER	TEMPERATURE, 4-20 MA	7
PT3004	TRANSMITTER	PRESSURE, 4-20 MA	6
PI3005	GAUGE, PRESSURE	0-30 PSI	5
P3004	ASSEMBLY, PUMP	480/240 VAC MOTOR	4
P3005	ASSEMBLY, PUMP	AIR DRIVEN MOTOR	3
–	FILTER, OIL	DUPLEX, 25 MICRON ELEMENTS	2
–	COOLER, AIR-OIL	240VAC MOTOR	1

PARTS LIST

UNLESS OTHERWISE SPECIFIED
ALL DIMENSIONS ARE IN INCHES.
DIMS IN [] ARE IN mm, AND
ARE FOR REFERENCE ONLY.

TOLERANCES UNLESS NOTED OTHERWISE
.X = ± .1
.XX = ± .06
.XXX = ± .005

ANGLES = ± .5°

DRAWN	M. AALY	03/16/2009
CHECKED	I. BOERU	03/16/2009
PROJ ENG	M. AALY	03/18/2009

THIRD ANGLE PROJECTION

STEWART & STEVENSON LLC

TITLE: SCHEMATIC, GENERATOR BEARING LUBRICATION SYSTEM DM3580EG7CT2 GENERATOR SET

SIZE	CAGE CODE	DWG NO	REV
D	81381	26110895	A

SCALE: N/A FILE: 26110895.dwg SHEET 1 OF 1

REVISION				
ZONE	LTR	DESCRIPTION	DATE	APPROVED
	—	INITIAL RELEASE PER ECO 000965	4/09	CH
	A	PER ECO 001029	5/09	CH
	B	PER ECO 001566	7/09	CH
	C	PER ECO 001640	7/09	CH
	D	PER ECO 001754	8/09	CH
	E	PER ECO 001873	9/09	CH
	F	PER ECO 003019	2/10	TN

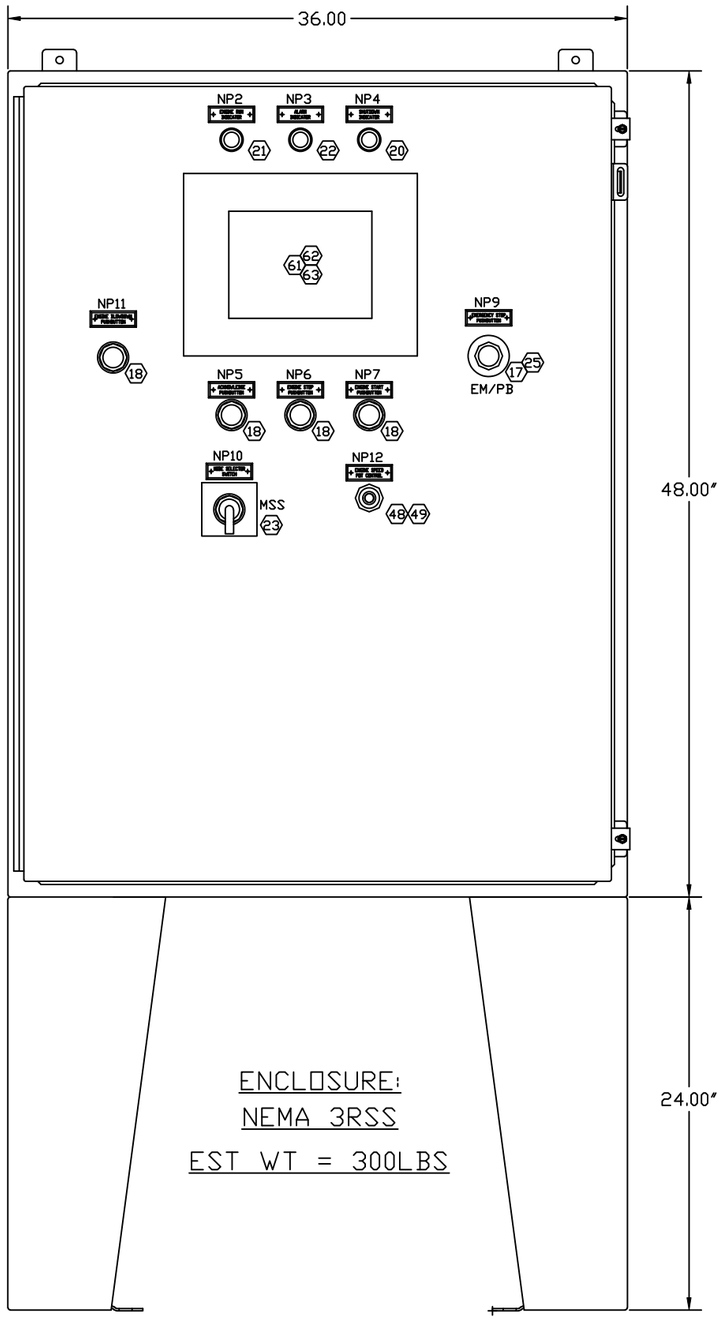

ENCLOSURE:
NEMA 3RSS
EST WT = 300LBS

FRONT ELEVATION

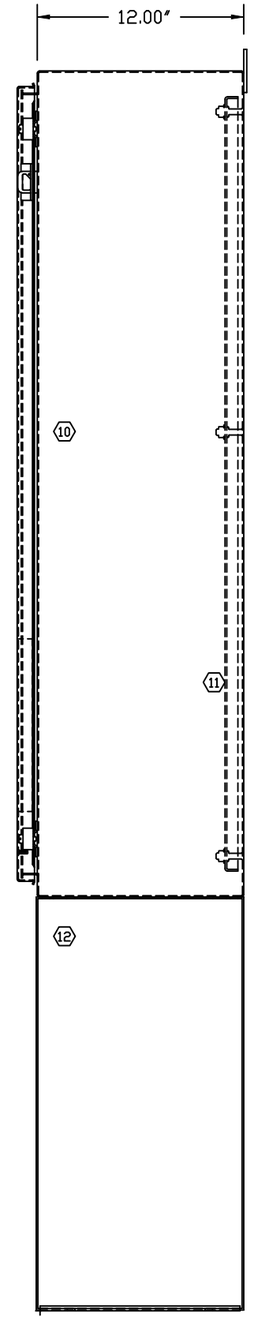

SIDE VIEW

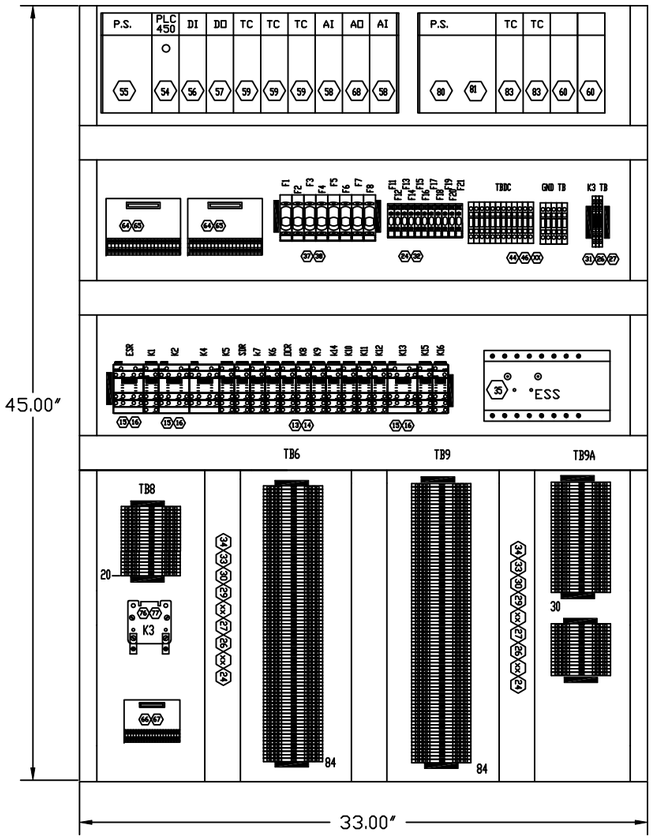

SUB PANNEL

NOTE:
DOOR AND SUB-PAN
TO BE BONDED TO
ENCLOSURE WITH #12 AWG

WEIGHTS							
STRESS							
MATERIALS & PROCESS							
MANUFACTURING ENGRG							
QUALITY ASSURANCE		PART DASH NO.	NEXT	FINAL	NEXT ASSY	USED ON	
ADDITIONAL APPROVALS	DATE		QTY REQD PER ASSY		APPLICATION		

UNLESS OTHERWISE SPECIFIED DIMENSIONS ARE IN INCHES
TOLERANCES
DECIMALS .XX ± .03 .XXX ± .010
ANGULAR ±
DO NOT SCALE DRAWING

TREATMENT

FINISH

SIMILAR TO | ACT WT | CALC WT

CONTRACT NO.

		DATE
DRAWN	C.HUELSMAN	2/09
CHECK	T.NGUYEN	2/09
DESIGN	C.HUELSMAN	2/09
DESIGN ACTIVITY		
CUSTOMER		

STEWART & STEVENSON
P.O. BOX 1637 HOUSTON, TEXAS, U.S.A.

TITLE
ASSEMBLY & WIRING ENGINE CONTROLLER

SIZE D | FSCM NO. 81381 | DWG NO. 26111179 F

SCALE N/A | RELEASE DATE | SHEET 1 OF 6

RELEASED

S&S PART #	FIND	VENDOR	TYP	COMPONENT	DESCRIPTION	UM	QT	WAS	REV	ADD QTY
27105699	1		REF		PLC PROGRAM	EA	0			
27105700	2		REF		HMI PROGRAM	EA	0			
25700101	10	EMF	PUR	B-483612SSHCR	ENCLOSURE, 36W X 48H X 12D, NEMA 3R, 304 SS	EA	1			
25700103	11	EMF	PUR	E-4836P	SUB-PANEL FOR ENCLOSURE 45 X 33	EA	1			
25700102	12	EMF	PUR	E-FSK2412SS	FLOOR STAND KIT, 24" H x10" W, 304SS	EA	1			
20600122	13	AUTODIRECT	PUR	QL2X1-D24	RELAY, 24VDC COIL, DPDT, BIAS DIODE, LED	EA	14	12	E	2
20600123	14	AUTODIRECT	PUR	SQL08D	RELAY DECK FOR QL2X1	EA	14	12	E	2
20600166	15	AUTODIRECT	PUR	QL4X1-D24	RELAY, 24VDC COIL, 4PDT, BIAS DIODE, LED	EA	5			
20600172	16	AUTODIRECT	PUR	SQL14D	RELAY DECK FOR QL4X1	EA	5			
20600149	17	AUTODIRECT	PUR	HT8CBRAB	PUSHBUTTON, 30MM, MUSHROOM HEAD, PUSH-PULL, 1NC	EA	2			
20600150	18	AUTODIRECT	PUR	HT8AAHA	PUSHBUTTON, 30MM, BLACK, MOMENTARY	EA	4			
20600062	19	AUTODIRECT	PUR	DN-R35S1	RAIL DIN	EA	2			
24100046	20	AUTODIRECT	PUR	HT8HFRV3	LIGHT, PILOT, 24VDC, RED	EA	1			
24100045	21	AUTODIRECT	PUR	HT8FVGV3	LIGHT, PILOT, 24VDC, GREEN	EA	1			
24100044	22	AUTODIRECT	PUR	HT8HFAV3	LIGHT, PILOT, 24VDC, amber	EA	1			
20600178	23	ELECT SW	PUR	31202B	SWITCH, 2-8 POSITIONS, 15A, 600V SERIES 31	EA	1			
77943	24	BUSSMANN	PUR	AGC-5	FUSE,1/4 X 1 1/4 5AMP,125V	EA	12		E	
20600152	25	ALLEN-BRAD	PUR	800T-N310	MUSHROOM PUSH BUTTON GUARD	EA	1		E	
24000153	26	AUTODIRECT	PUR	DN-Q12-2-2	TERMINAL BLOCK,5MM,20A,12-24AWG, DR,600V	EA	275	260	E	15
24000154	27	AUTODIRECT	PUR	DN-QEC12-2-2	TERMINAL BLOCK END	EA	14	12	E	2
20600148	28		PUR	GMA10	FUSE,5MMX20MM 10 AMP,125V		1			
24000155	29	AUTODIRECT	PUR	DN-QL100	TAG,MARKING, TB'S 1-100	EA	3			
24000156	30	AUTODIRECT	PUR	DN-QLB	TAG,MARKING, TB'S BLANK	EA	2			
24000178	31	AUTODIRECT	PUR	DN-Q12-1-2DR	TERMINAL BLOCK, DIODE SINGLE POLE,5MM (for K3)	EA	1			
24000158	32	AUTODIRECT	PUR	DNF6L24	FUSE DISCONNECT BLOCK,1P,5MMX20MM,DIN-R	EA	12			
20600063	33	AUTODIRECT	PUR	DN-EB35	END BRACKET	EA	4			
24000157	34	AUTODIRECT	PUR	DN-Q2J1210	JUMPER, INSULATED, ADJACENT FOR DN-Q12	EA	30			
20600175	35	DYNALCO	PUR	SST-2200A	ELECTRONIC SPEED SWITCH, 24VDC, TWO SET POINTS SPDT	EA	1			
	36									
20600168	37	BUSSMAN	PUR	FNQ-R-15	FUSE, 15AMP,CLASS CC, REJECTION TYPE	EA	8			
20600044	38	AUTODIRECT	PUR	DN-FM6L-CC	FUSE BLOCKBLOCK, INDICATED FUSE, 1 POLE, 30A	EA	8			
24000161	39	HOFFMAN	PUR	A-200200WH	WIREWAY, 2"WX2"H	FT	8			
24000162	40	HOFFMAN	PUR	A-100200WH	WIREWAY, 1"WX2"H	FT	8			
24000163	41	HOFFMAN	PUR	A--100CWH	WIREWAY COVER, 1" PANDUIT	FT	8			
24000164	42	HOFFMAN	PUR	A-200CWH	WIREWAYCOVER, 2" PANDUIT	FT	8			
24000160	43	AUTODIRECT	PUR	DN-QEC10	END COVER	EA	2			
24000159	44	AUTODIRECT	PUR	DN-Q10	TERMINAL BLOCK, 30A DIN-R, 600V	EA	20			
	45		PUR			EA	20			
20600063	46	AUTODIRECT	PUR	DN-EB35	END BRACKET	EA	4			
20600176	47	AUTODIRECT	PUR	HT8JNH3A	SWITCH 2 POSITIONS, MAINTAIN	EA	1			
20600174	48	CLAROSTAT	PUR	412	DIAL LOCK	EA	1			
20600023	49	CLAROSTAT	PUR	73JA-1K	1K POTENTIALMETER, 10TURN	EA	1			
20600177	50	AUTODIRECT	PUR	HT8A	AUX CONTACT 1NO	EA	1			

S&S PART #	FIND	VENDOR	TYP	COMPONENT	DESCRIPTION	UM	QT	WAS	REV	ADD QTY
23900069	54	AUTO. DIRECT	PUR	D4-450DC-1	PLC, D4-450 CPU, 30.8K WORDS TOTAL, 24 VDC	EA	1			
23900070	55	AUTO. DIRECT	PUR	D4-08B-1	DL405 8 SLOT LOCAL BASE	EA	1			
23900071	56	AUTO. DIRECT	PUR	D4-32ND3-1	32 PT. 24VDC CURRENT SINKING/SOURCING INPUT MODULE	EA	1			
23900072	57	AUTO. DIRECT	PUR	D4-32TD2	32 PT. 24VDC CURRENT SOURCING OUTPUT MOD, 0.2A/POINT	EA	1			
23900073	58	AUTO. DIRECT	PUR	F4-08AD	8 CHANNEL ANALOG INPUT MOD, 12 BIT RESOLUTION, 24VDC	EA	2	1	B	1
23900074	59	AUTO. DIRECT	PUR	F4-08THM-J	8 CHANNEL DIFFERENTIAL THEMOCOUPLE MOD, TYPE J, 24VDC	EA	3			
23900075	60	AUTO. DIRECT	PUR	D4-FILL	D450 FILLER MODULE	EA	3			
23900076	61	AUTO. DIRECT	PUR	EZ-T10C-FS	EZTOUCH Operator Panel, 10.4" TFT Color, 512k Ram, 20-30 VDC	EA	1			
23900077	62	AUTO. DIRECT	PUR	EZ-RAM-1	EZTOUCH 512KB RAM OPTION CARD	EA	1			
23900078	63	AUTO. DIRECT	PUR	EZ-4CBL-1	EZTOUCH PANEL TO A DL405 (TOP PORT)	EA	1			
23900079	64	AUTO. DIRECT	PUR	ZL-CM40	FEED-THROUGH CONNECTOR MODULE	EA	2			
23900080	65	AUTO. DIRECT	PUR	ZL-4CBL4	D250/D405-32 ZIPLINK CABLE	EA	2			
23900081	66	AUTO. DIRECT	PUR	DN-25TB	COMMUNICATION ADAPTER MODULE	EA	1			
23900082	67	AUTO. DIRECT	PUR	ZL-DN25TB-CBL	25 PIN SHIELD CABLE FOR DN-25TB MODULE, 6.5FT.	EA	1			
23900092	68	AUTO. DIRECT	PUR	F4-04DA-1	4 CHANNEL ANALOG OUTPUT MOD, 12 BIT RESOLUTION, 24VDC	EA	1			
	69									
	70									
	71									
	72									
	73									
	74									
	75									
20600161	76	P & B	PUR	PRD-7DGO-24	Relay, heavy duty, 30A, 24VDC coil, DPST, NO	EA	1	2	E	-1
20600020	77	NEWARK	PUR	1N5404	DIODE,CONTACTOR COIL DE-SPIKING	EA	1	2	E	-1
23900089	80	AUTO. DIRECT	PUR	D4-04B-1	DL405,4 SLOT LOCAL BASE	EA	1			
23900090	81	AUTO. DIRECT	PUR	D4-EXDC	EXPANSION UNIT LOCAL	EA	1			
23900091	82	AUTO. DIRECT	PUR	D4-EXCBL-1	EXPANSION CABLE 3.08 FEET	EA	1			
22900060	83	AUTO. DIRECT	PUR	F4-08THM-K	8 CHANNEL DIFF- THERMOCOUPLE MOD, TYPE K, 24VDC		2			
27100995	84		PUR		ENCLOSURE,DOOR MODIFICATION	EA	1			
27101942	85		PUR		NAMEPLATE SCEDULE, ENG CONTROLLER	EA	1			
25700106	85		PUR	A-LGDSTOP2	DOOR STOP KIT	EA	1	0	E	

WEIGHTS
STRESS
MATERIALS & PROCESS
MANUFACTURING ENGRG
QUALITY ASSURANCE
ADDITIONAL APPROVALS — DATE

PART DASH NO.	NEXT	FINAL	NEXT ASSY	USED ON
	QTY REQD PER ASSY		APPLICATION	

UNLESS OTHERWISE SPECIFIED
DIMENSIONS ARE IN INCHES
TOLERANCES
DECIMALS .XX ± .03 .XXX ± .010
ANGULAR ±
DO NOT SCALE DRAWING

TREATMENT
FINISH
SIMILAR TO | ACT WT | CALC WT

CONTRACT NO.
DRAWN C. HUELSMAN DATE 3/09
CHECK T.NGUYEN 3/09
DESIGN C.HUELSMAN 3/09
DESIGN ACTIVITY
CUSTOMER

STEWART & STEVENSON
P.O. BOX 1637 HOUSTON, TEXAS, U.S.A.

TITLE
ASSEMLY AND WIRING
ENGINE CONTROLLER

SIZE D | FSCM NO. 81381 | DWG NO. 26111179 F
SCALE N/A | RELEASE DATE | SHEET 2 OF 6

RELEASED

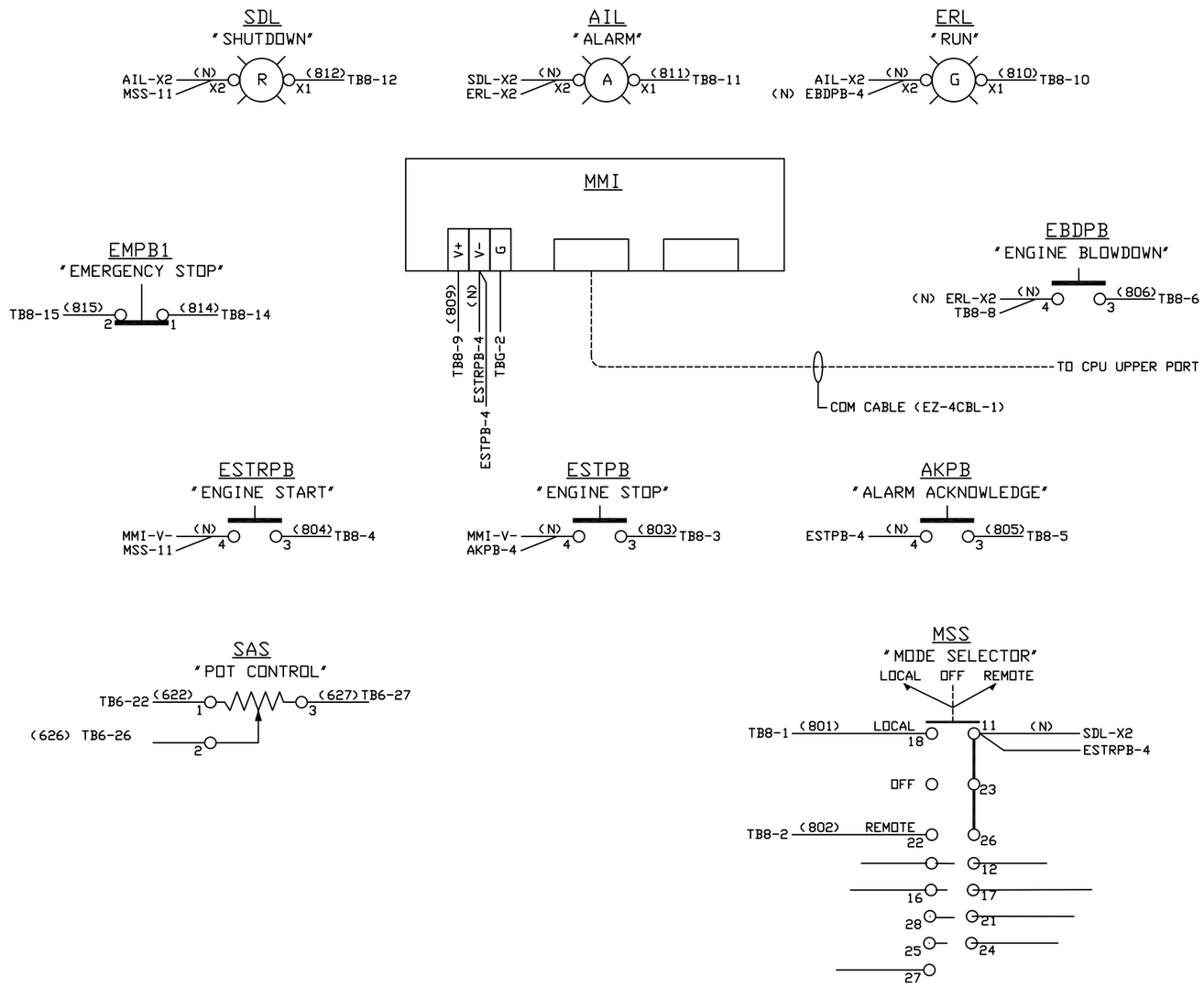

NOTES:

1. ALL WIRING TO BE #18, SIS EXCEPT AS NOTED.
2. REFER TO SHT 4 & 5 FOR SUBPANEL DIAGRAMS.
3. REFER TO SHT 1 FOR DEVICE LAYOUT AND SHEET 2 FOR BOM.
4. ALL WIRE MUST TERMINATE WITH THE CRIMPED FERRULES

BACK OF DOOR WIRING

WEIGHTS						
STRESS						
MATERIALS & PROCESS						
MANUFACTURING ENGRG						
QUALITY ASSURANCE		PART DASH NO.	NEXT	FINAL	NEXT ASSY	USED ON
ADDITIONAL APPROVALS	DATE		QTY REQD PER ASSY		APPLICATION	

UNLESS OTHERWISE SPECIFIED DIMENSIONS ARE IN INCHES
TOLERANCES
DECIMALS .XX ± .03 .XXX ± .010
ANGULAR ±
DO NOT SCALE DRAWING

TREATMENT

FINISH

SIMILAR TO | ACT WT | CALC WT

CONTRACT NO.

		DATE
DRAWN	C.HUELSMAN	3/09
CHECK	T. NGUYEN	3/09
DESIGN	C.HUELSMAN	3/09
DESIGN ACTIVITY		
CUSTOMER		

STEWART & STEVENSON
P.O. BOX 1637 HOUSTON, TEXAS, U.S.A.

TITLE
ASSEMBLY AND WIRING
ENGINE CONTROLLER

SIZE D | FSCM NO. 81381 | DWG NO. 26111179 F

SCALE N/A | RELEASE DATE | SHEET 3 OF 6

RELEASED

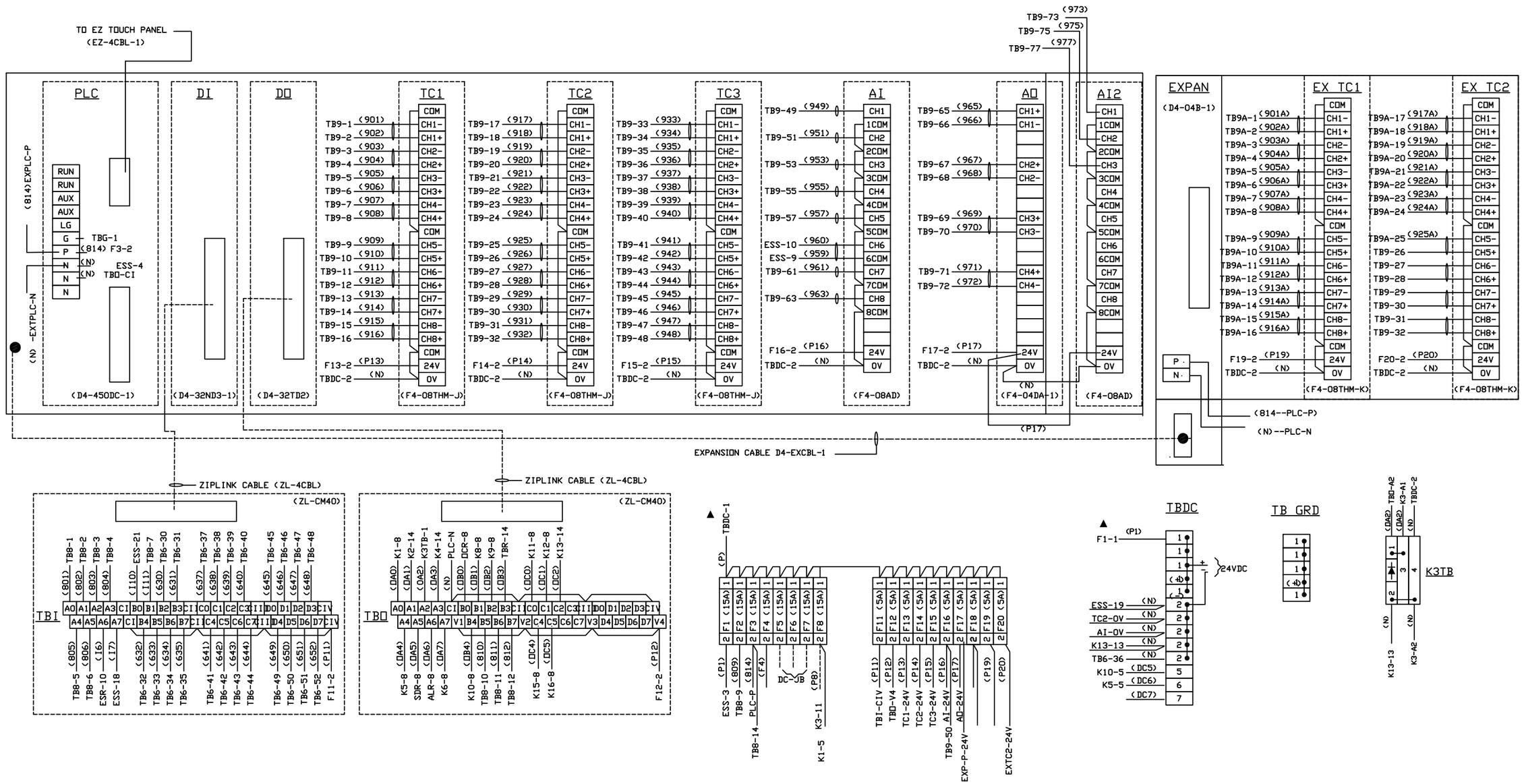

NOTES:

1. ALL WIRING TO BE #18, SIS EXCEPT NOTED.
2. ALL THERMOCOUPLE WIRING TO BE #20, SHIELDED, TYPE J.
3. ALL ANALOG WIRING TO BE #20, SHIELDED, TWISTED.
4. REFER TO SHT 3 & 5 FOR REFERENCED DIAGRAMS.
5. REFER TO SHT 1 & 2 FOR DEVICE LAYOUT AND BOM.
6. ALL THERMOCOUPLE WIRING TO BE #20, SHIELDED, TYPE K FOR PLC EXPANSION MODULE.

▲ DENOTES OF USING #14, SIS.

WEIGHTS						
STRESS						
MATERIALS & PROCESS						
MANUFACTURING ENGRG						
QUALITY ASSURANCE						
ADDITIONAL APPROVALS	DATE	PART DASH NO.	NEXT	FINAL	NEXT ASSY	USED ON
			QTY REQD PER ASSY		APPLICATION	

UNLESS OTHERWISE SPECIFIED DIMENSIONS ARE IN INCHES
TOLERANCES
DECIMALS .XX ± .03 .XXX ± .010
ANGULAR ±
DO NOT SCALE DRAWING
TREATMENT
FINISH
SIMILAR TO | ACT WT | CALC WT

CONTRACT NO.		
DRAWN	C.HUELSMAN	3/09
CHECK	T. NGUYEN	3/09
DESIGN	C.HUELSMAN	3/09
DESIGN ACTIVITY		
CUSTOMER		

STEWART & STEVENSON
P.O. BOX 1637 HOUSTON, TEXAS, U.S.A.

TITLE
ASSEMBLY AND WIRING
ENGINE CONTROLLER

SIZE	FSCM NO.	DWG NO.
D	81381	26111179 F

SCALE N/A | RELEASE DATE | SHEET 4 OF 6

RELEASED

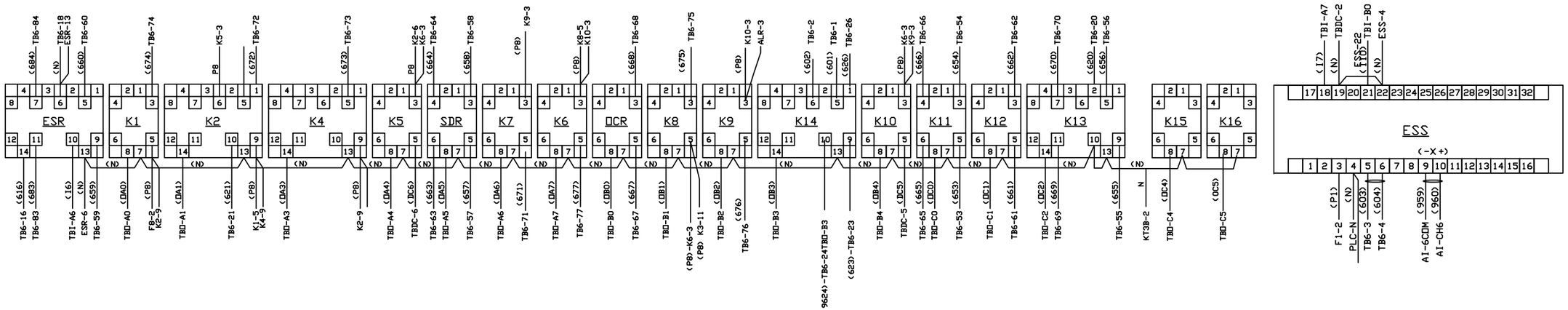

RELAY CONTACT ARRANGEMENT

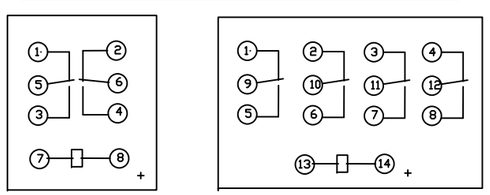

2PDT 4PDT

SUBPANEL - LOWER

NOTES:

RELAY SOCKET TERMINALS ARE SHOWN FOR CONNECTIONS

1. ALL WIRING TO BE #18, SIS EXCEPT NOTED.
2. ALL THERMOCOUPLE WIRING TO BE #20, SHIELDED, TYPE J.
3. ALL ANALOG WIRING TO BE #20, SHIELDED, TWISTED.
4. REFER TO SHT 3&4 FOR REFERENCED DIAGRAMS.
5. REFER TO SHT 1 FOR DEVICE LAYOUT AND BOM.
6. REMOVE JUMPER BEFORE INSTALLING REMOTE DEVICE.

▲ DENOTES OF USING #14, SIS.

WEIGHTS						
STRESS						
MATERIALS & PROCESS						
MANUFACTURING ENGRG						
QUALITY ASSURANCE						
ADDITIONAL APPROVALS	DATE	PART DASH NO.	NEXT	FINAL	NEXT ASSY	USED ON
			QTY REQD PER ASSY		APPLICATION	

UNLESS OTHERWISE SPECIFIED DIMENSIONS ARE IN INCHES
TOLERANCES
DECIMALS .XX ± .03 .XXX ± .010 ANGULAR ±
DO NOT SCALE DRAWING

TREATMENT

FINISH

SIMILAR TO | ACT WT | CALC WT

CONTRACT NO.

		DATE
DRAWN	C.HUELSMAN	3/09
CHECK	T. NGUYEN	3/09
DESIGN	C.HUELSMAN	3/09
DESIGN ACTIVITY		
CUSTOMER		

STEWART & STEVENSON
P.O. BOX 1637 HOUSTON, TEXAS, U.S.A.

TITLE
ASSEMBLY AND WIRING
ENGINE CONTROLLER

SIZE D | FSCM NO. 81381 | DWG NO. 26111179 F

SCALE N/A | RELEASE DATE | SHEET 5 OF 6

RELEASED

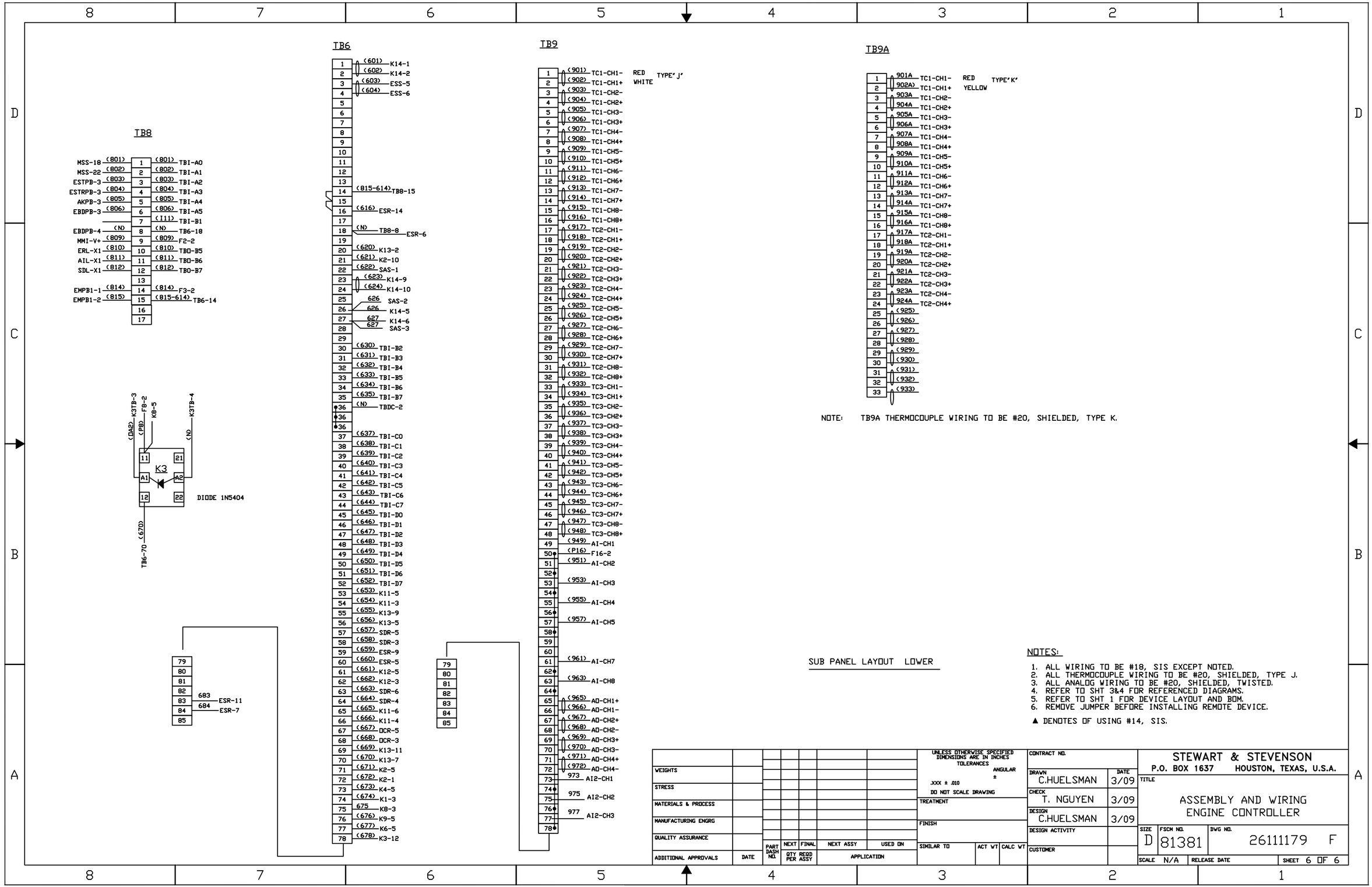
TB8
MSS-18 (801) 1 (801) TBI-A0
MSS-22 (802) 2 (802) TBI-A1
ESTPB-3 (803) 3 (803) TBI-A2
ESTRPB-3 (804) 4 (804) TBI-A3
AKPB-3 (805) 5 (805) TBI-A4
EBDPB-3 (806) 6 (806) TBI-A5
7 (111) TBI-B1
EBDPB-4 (N) 8 (N) TB6-18
MMI-V+ (809) 9 (809) F2-2
ERL-X1 (810) 10 (810) TBD-B5
AIL-X1 (811) 11 (811) TBD-B6
SDL-X1 (812) 12 (812) TBD-B7
13
EMPB1-1 (814) 14 (814) F3-2
EMPB1-2 (815) 15 (815-614) TB6-14
16
17
(DA2) K3TB-3
(P8) F8-2
K8-5
(N) K3TB-4
K3
A1
A2
11
21
12
22
DIODE 1N5404
TB6-70 (670)
TB6
1 (601) K14-1
2 (602) K14-2
3 (603) ESS-5
4 (604) ESS-6
5
6
7
8
9
10
11
12
13
14 (815-614) TB8-15
15
16 (616) ESR-14
17
18 (N) TB8-8 ESR-6
19
20 (620) K13-2
21 (621) K2-10
22 (622) SAS-1
23 (623) K14-9
24 (624) K14-10
25 626 SAS-2
26 626 K14-5
27 627 K14-6
28 627 SAS-3
29
30 (630) TBI-B2
31 (631) TBI-B3
32 (632) TBI-B4
33 (633) TBI-B5
34 (634) TBI-B6
35 (635) TBI-B7
36 (N) TBDC-2
36
36
37 (637) TBI-C0
38 (638) TBI-C1
39 (639) TBI-C2
40 (640) TBI-C3
41 (641) TBI-C4
42 (642) TBI-C5
43 (643) TBI-C6
44 (644) TBI-C7
45 (645) TBI-D0
46 (646) TBI-D1
47 (647) TBI-D2
48 (648) TBI-D3
49 (649) TBI-D4
50 (650) TBI-D5
51 (651) TBI-D6
52 (652) TBI-D7
53 (653) K11-5
54 (654) K11-3
55 (655) K13-9
56 (656) K13-5
57 (657) SDR-5
58 (658) SDR-3
59 (659) ESR-9
60 (660) ESR-5
61 (661) K12-5
62 (662) K12-3
63 (663) SDR-6
64 (664) SDR-4
65 (665) K11-6
66 (666) K11-4
67 (667) DCR-5
68 (668) DCR-3
69 (669) K13-11
70 (670) K13-7
71 (671) K2-5
72 (672) K2-1
73 (673) K4-5
74 (674) K1-3
75 675 K8-3
76 (676) K9-5
77 (677) K6-5
78 (678) K3-12
79
80
81
82
83 683 ESR-11
84 684 ESR-7
85
TB9
1 (901) TC1-CH1- RED
2 (902) TC1-CH1+ WHITE
TYPE "J"
3 (903) TC1-CH2-
4 (904) TC1-CH2+
5 (905) TC1-CH3-
6 (906) TC1-CH3+
7 (907) TC1-CH4-
8 (908) TC1-CH4+
9 (909) TC1-CH5-
10 (910) TC1-CH5+
11 (911) TC1-CH6-
12 (912) TC1-CH6+
13 (913) TC1-CH7-
14 (914) TC1-CH7+
15 (915) TC1-CH8-
16 (916) TC1-CH8+
17 (917) TC2-CH1-
18 (918) TC2-CH1+
19 (919) TC2-CH2-
20 (920) TC2-CH2+
21 (921) TC2-CH3-
22 (922) TC2-CH3+
23 (923) TC2-CH4-
24 (924) TC2-CH4+
25 (925) TC2-CH5-
26 (926) TC2-CH5+
27 (927) TC2-CH6-
28 (928) TC2-CH6+
29 (929) TC2-CH7-
30 (930) TC2-CH7+
31 (931) TC2-CH8-
32 (932) TC2-CH8+
33 (933) TC3-CH1-
34 (934) TC3-CH1+
35 (935) TC3-CH2-
36 (936) TC3-CH2+
37 (937) TC3-CH3-
38 (938) TC3-CH3+
39 (939) TC3-CH4-
40 (940) TC3-CH4+
41 (941) TC3-CH5-
42 (942) TC3-CH5+
43 (943) TC3-CH6-
44 (944) TC3-CH6+
45 (945) TC3-CH7-
46 (946) TC3-CH7+
47 (947) TC3-CH8-
48 (948) TC3-CH8+
49 (949) AI-CH1
50 (P16) F16-2
51 (951) AI-CH2
52
53 (953) AI-CH3
54
55 (955) AI-CH4
56
57 (957) AI-CH5
58
59
60
61 (961) AI-CH7
62
63 (963) AI-CH8
64
65 (965) AO-CH1+
66 (966) AO-CH1-
67 (967) AO-CH2+
68 (968) AO-CH2-
69 (969) AO-CH3+
70 (970) AO-CH3-
71 (971) AO-CH4+
72 (972) AO-CH4-
73 973 AI2-CH1
74
75 975 AI2-CH2
76
77 977 AI2-CH3
78
TB9A
1 901A TC1-CH1- RED
2 902A TC1-CH1+ YELLOW
TYPE "K"
3 903A TC1-CH2-
4 904A TC1-CH2+
5 905A TC1-CH3-
6 906A TC1-CH3+
7 907A TC1-CH4-
8 908A TC1-CH4+
9 909A TC1-CH5-
10 910A TC1-CH5+
11 911A TC1-CH6-
12 912A TC1-CH6+
13 913A TC1-CH7-
14 914A TC1-CH7+
15 915A TC1-CH8-
16 916A TC1-CH8+
17 917A TC2-CH1-
18 918A TC2-CH1+
19 919A TC2-CH2-
20 920A TC2-CH2+
21 921A TC2-CH3-
22 922A TC2-CH3+
23 923A TC2-CH4-
24 924A TC2-CH4+
25 (925)
26 (926)
27 (927)
28 (928)
29 (929)
30 (930)
31 (931)
32 (932)
33 (933)
NOTE: TB9A THERMOCOUPLE WIRING TO BE #20, SHIELDED, TYPE K.
SUB PANEL LAYOUT LOWER
NOTES:
1. ALL WIRING TO BE #18, SIS EXCEPT NOTED.
2. ALL THERMOCOUPLE WIRING TO BE #20, SHIELDED, TYPE J.
3. ALL ANALOG WIRING TO BE #20, SHIELDED, TWISTED.
4. REFER TO SHT 3&4 FOR REFERENCED DIAGRAMS.
5. REFER TO SHT 1 FOR DEVICE LAYOUT AND BOM.
6. REMOVE JUMPER BEFORE INSTALLING REMOTE DEVICE.
▲ DENOTES OF USING #14, SIS.
WEIGHTS
STRESS
MATERIALS & PROCESS
MANUFACTURING ENGRG
QUALITY ASSURANCE
ADDITIONAL APPROVALS
DATE
PART DASH NO.
NEXT
FINAL
NEXT ASSY
USED ON
QTY REQD PER ASSY
APPLICATION
UNLESS OTHERWISE SPECIFIED DIMENSIONS ARE IN INCHES TOLERANCES
ANGULAR ±
.XXX ± .010
DO NOT SCALE DRAWING
TREATMENT
FINISH
SIMILAR TO
ACT WT
CALC WT
CONTRACT NO.
DRAWN C.HUELSMAN 3/09
CHECK T. NGUYEN 3/09
DESIGN C.HUELSMAN 3/09
DESIGN ACTIVITY
CUSTOMER
STEWART & STEVENSON
P.O. BOX 1637 HOUSTON, TEXAS, U.S.A.
TITLE
ASSEMBLY AND WIRING
ENGINE CONTROLLER
SIZE D
FSCM NO. 81381
DWG NO. 26111179 F
SCALE N/A
RELEASE DATE
SHEET 6 OF 6

RELEASED

REVISION				
ZONE	LTR	DESCRIPTION	DATE	APPROVED
	A	ECO #001365	6/09	CH
	B	ECO 001732	8/09	CH
	C	ECO 001864	9/09	CH
	D	ECO 002118	11/09	CH
	E	ECO 005052	11/10	CH

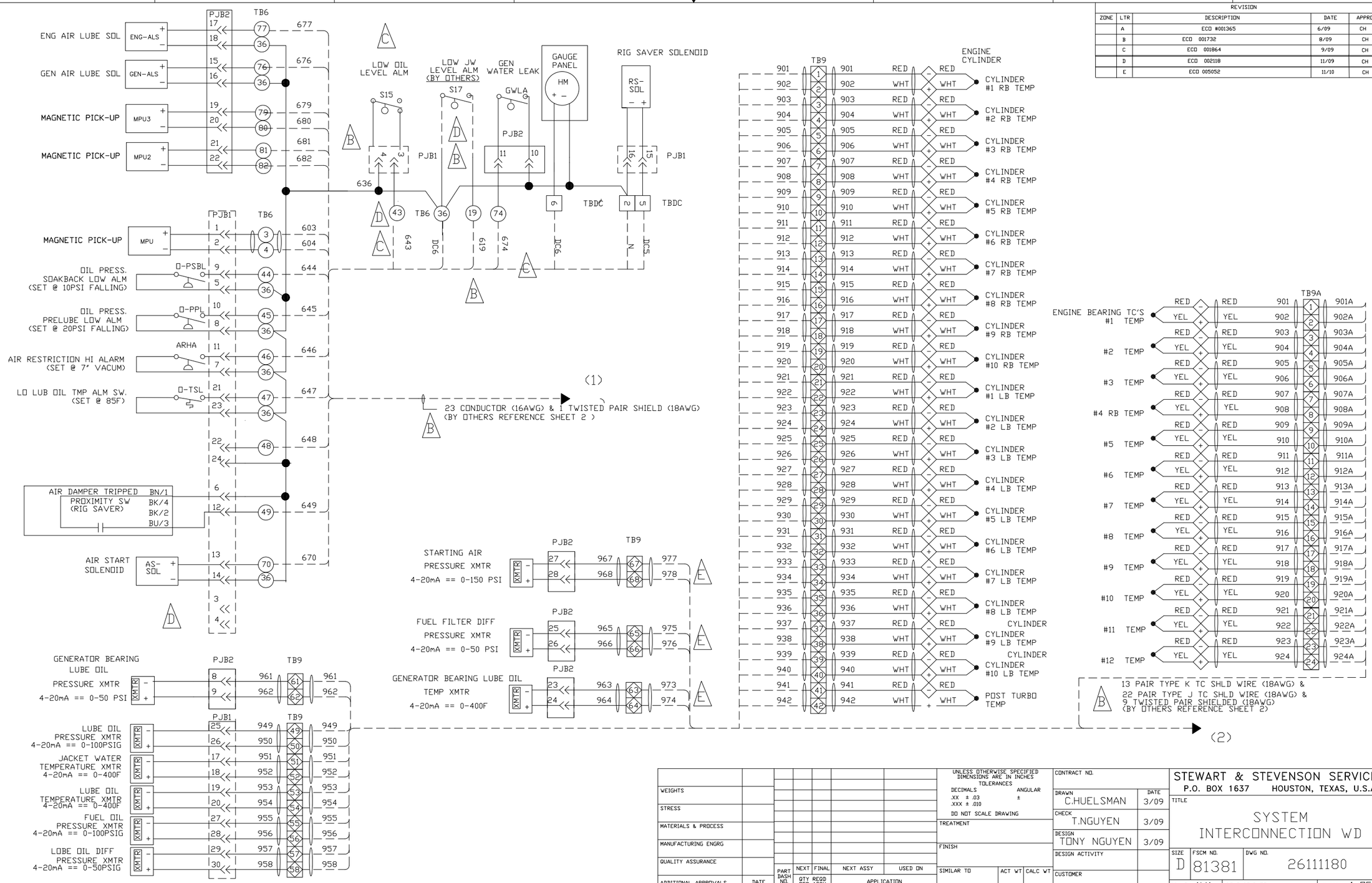

WEIGHTS							
STRESS							
MATERIALS & PROCESS							
MANUFACTURING ENGRG							
QUALITY ASSURANCE							
ADDITIONAL APPROVALS	DATE	PART DASH NO.	NEXT	FINAL	NEXT ASSY	USED ON	
			QTY REQD PER ASSY		APPLICATION		

UNLESS OTHERWISE SPECIFIED DIMENSIONS ARE IN INCHES
TOLERANCES
DECIMALS .XX ± .03 .XXX ± .010
ANGULAR ±
DO NOT SCALE DRAWING
TREATMENT
FINISH
SIMILAR TO | ACT WT | CALC WT

CONTRACT NO.		
DRAWN	C.HUELSMAN	3/09
CHECK	T.NGUYEN	3/09
DESIGN	TONY NGUYEN	3/09
DESIGN ACTIVITY		
CUSTOMER		

STEWART & STEVENSON SERVICES
P.O. BOX 1637 HOUSTON, TEXAS, U.S.A.

TITLE
SYSTEM INTERCONNECTION WD

SIZE	FSCM NO.	DWG NO.	
D	81381	26111180	E
SCALE N/A	RELEASE DATE	SHEET 1 OF 5	

RELEASED

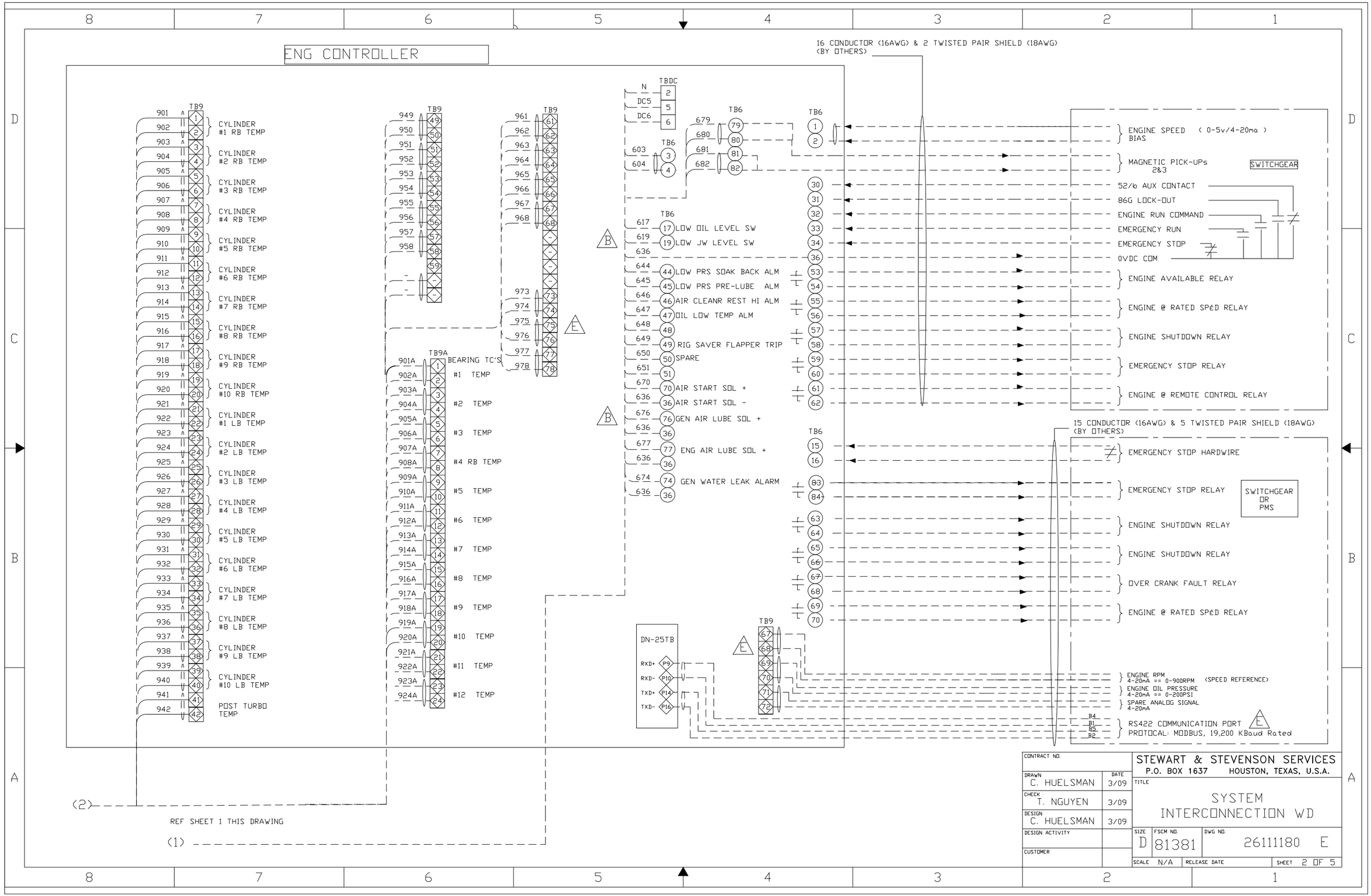
ENG CONTROLLER
16 CONDUCTOR (16AWG) & 2 TWISTED PAIR SHIELD (18AWG) (BY OTHERS)
15 CONDUCTOR (16AWG) & 5 TWISTED PAIR SHIELD (18AWG) (BY OTHERS)
TB9
CYLINDER #1 RB TEMP
CYLINDER #2 RB TEMP
CYLINDER #3 RB TEMP
CYLINDER #4 RB TEMP
CYLINDER #5 RB TEMP
CYLINDER #6 RB TEMP
CYLINDER #7 RB TEMP
CYLINDER #8 RB TEMP
CYLINDER #9 RB TEMP
CYLINDER #10 RB TEMP
CYLINDER #1 LB TEMP
CYLINDER #2 LB TEMP
CYLINDER #3 LB TEMP
CYLINDER #4 LB TEMP
CYLINDER #5 LB TEMP
CYLINDER #6 LB TEMP
CYLINDER #7 LB TEMP
CYLINDER #8 LB TEMP
CYLINDER #9 LB TEMP
CYLINDER #10 LB TEMP
POST TURBO TEMP
TB9A
BEARING TC'S
#1 TEMP
#2 TEMP
#3 TEMP
#4 RB TEMP
#5 TEMP
#6 TEMP
#7 TEMP
#8 TEMP
#9 TEMP
#10 TEMP
#11 TEMP
#12 TEMP
TBDC
N
DC5
DC6
TB6
LOW OIL LEVEL SW
LOW JW LEVEL SW
LOW PRS SOAK BACK ALM
LOW PRS PRE-LUBE ALM
AIR CLEANR REST HI ALM
OIL LOW TEMP ALM
RIG SAVER FLAPPER TRIP
SPARE
AIR START SOL +
AIR START SOL -
GEN AIR LUBE SOL +
ENG AIR LUBE SOL +
GEN WATER LEAK ALARM
ENGINE SPEED BIAS (0-5v/4-20ma)
MAGNETIC PICK-UPs 2&3
SWITCHGEAR
52/b AUX CONTACT
86G LOCK-OUT
ENGINE RUN COMMAND
EMERGENCY RUN
EMERGENCY STOP
0VDC COM
ENGINE AVAILABLE RELAY
ENGINE @ RATED SPEED RELAY
ENGINE SHUTDOWN RELAY
EMERGENCY STOP RELAY
ENGINE @ REMOTE CONTROL RELAY
EMERGENCY STOP HARDWIRE
EMERGENCY STOP RELAY
SWITCHGEAR OR PMS
ENGINE SHUTDOWN RELAY
ENGINE SHUTDOWN RELAY
OVER CRANK FAULT RELAY
ENGINE @ RATED SPEED RELAY
DN-25TB
RXD+
RXD-
TXD+
TXD-
ENGINE RPM 4-20mA == 0-900RPM (SPEED REFERENCE)
ENGINE OIL PRESSURE 4-20mA == 0-200PSI
SPARE ANALOG SIGNAL 4-20mA
RS422 COMMUNICATION PORT
PROTOCAL: MODBUS, 19,200 KBaud Rated
REF SHEET 1 THIS DRAWING
(2)
(1)
CONTRACT NO.
DRAWN C. HUELSMAN 3/09
CHECK T. NGUYEN 3/09
DESIGN C. HUELSMAN 3/09
DESIGN ACTIVITY
CUSTOMER
STEWART & STEVENSON SERVICES
P.O. BOX 1637 HOUSTON, TEXAS, U.S.A.
TITLE
SYSTEM INTERCONNECTION WD
SIZE D
FSCM NO. 81381
DWG NO. 26111180 E
SCALE N/A
RELEASE DATE
SHEET 2 OF 5

RELEASED

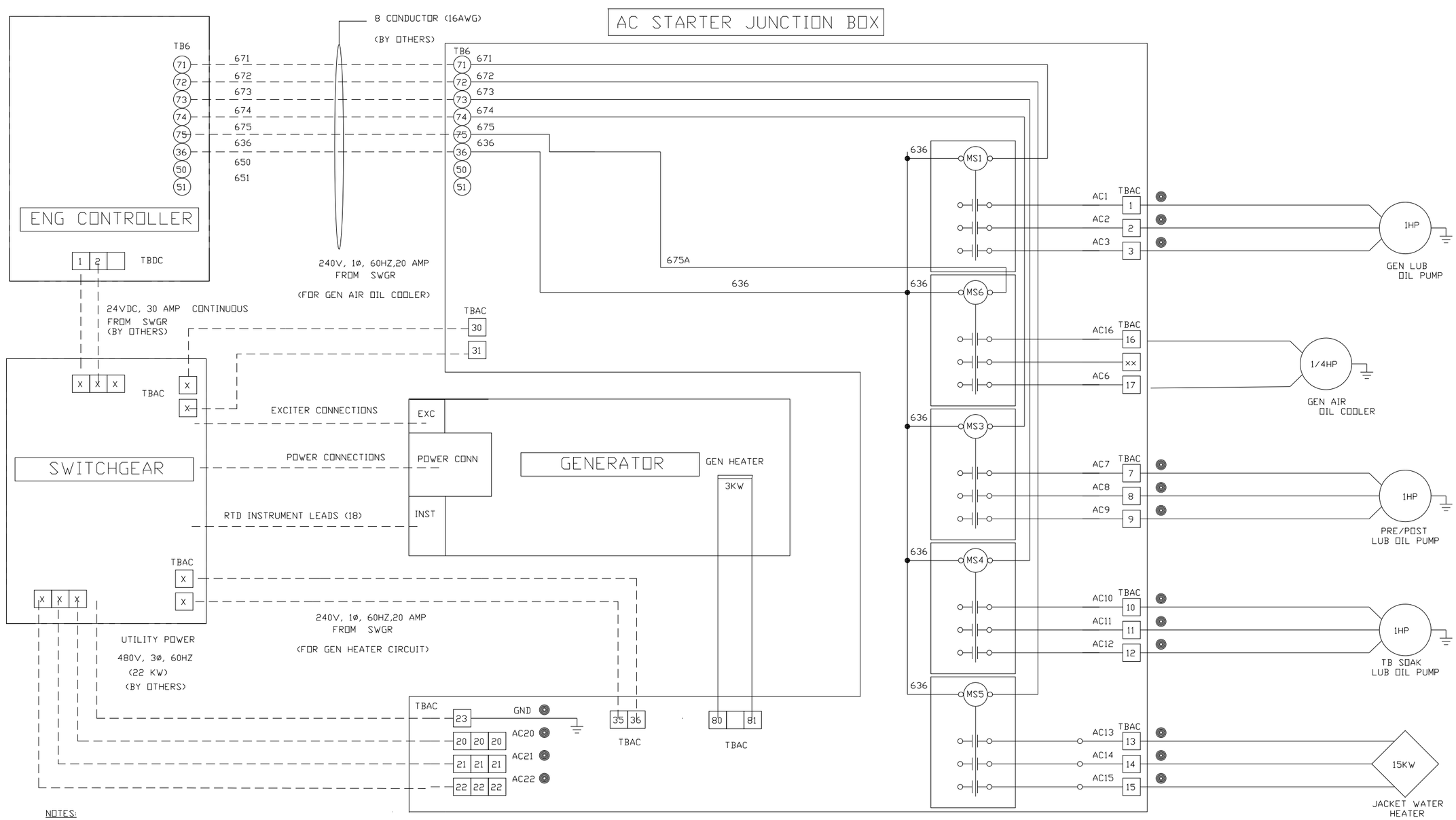

NOTES:

ALL CONTROL WIRE ARE 18AWG MINIMUM

⊙ == SIS 12 AWG CONDUCTOR

— — — — — CONNECTION BY OTHERS

CONTRACT NO.		STEWART & STEVENSON SERVICES P.O. BOX 1637 HOUSTON, TEXAS, U.S.A.
DRAWN C.HUELSMAN	DATE 3/09	TITLE SYSTEM INTERCONNECTION WD
CHECK T. NGUYEN	3/09	
DESIGN C. HUELSMAN	3/09	
DESIGN ACTIVITY		SIZE D · FSCM NO. 81381 · DWG NO. 26111180 E
CUSTOMER		SCALE N/A · RELEASE DATE · SHEET 3 OF 5

RELEASED

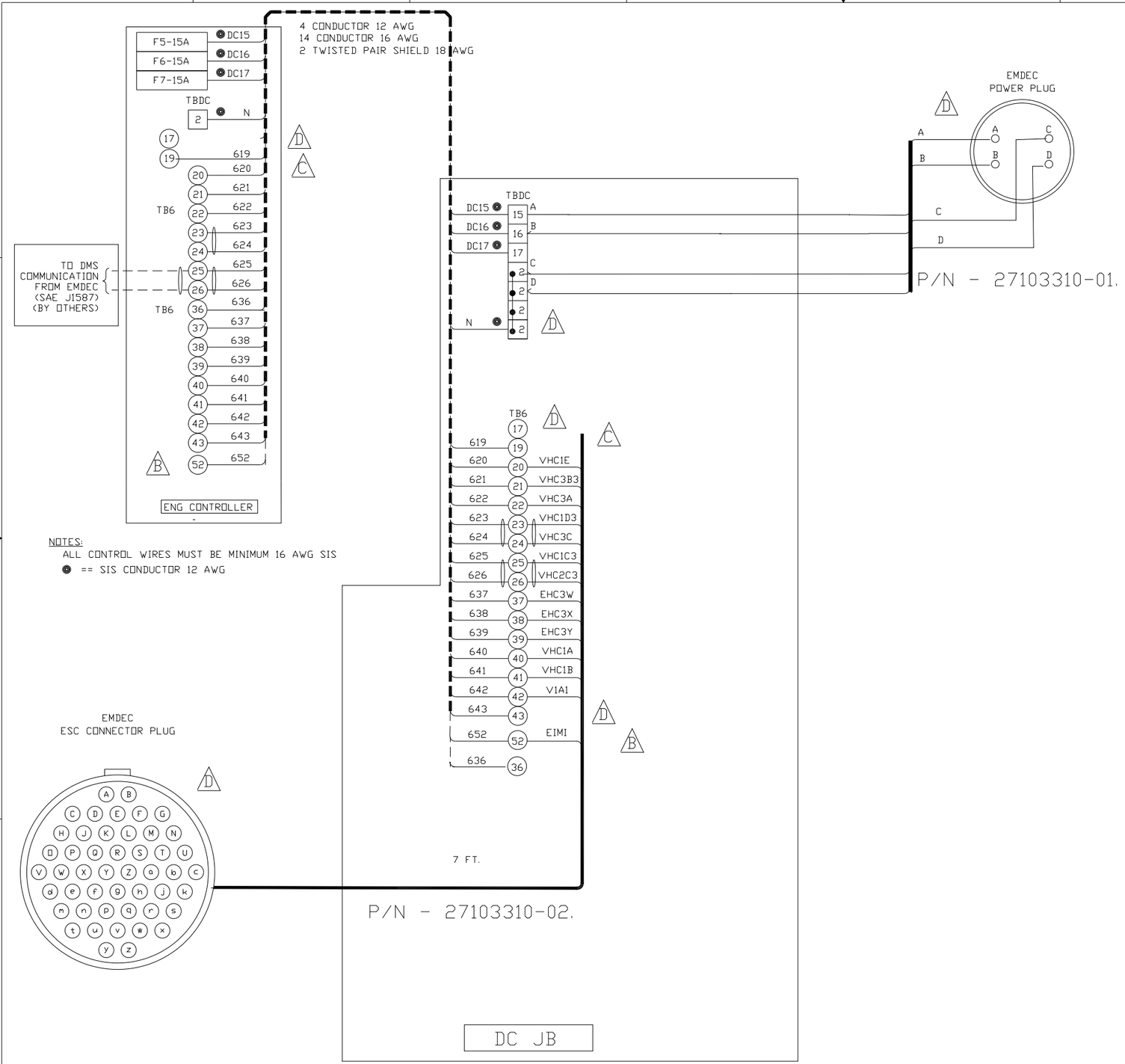

TB	PIN	WIRE #	FUNCTION
TBDC-15	A	DC15	+24-VDC
TBDC-16	B	DC16	24-VDC
TBDC-2	C	N	NEUTRAL
TBDC-2	D	N	NEUTRAL

TB	PIN	WIRE #	FUNCTION
	A		
	B		
TB6-37	C	637	CRANKCASE PRESSURE FAULT ALARM
TB6-38	D	638	LOW OIL PRESSURE FAULT ALARM
TB6-39	E	639	HIGH OIL TEMP ALARM
	F		
	G-J		
	K		
TB6-24	L	624	RPM REFERENCE - (5VDC NEGATIVE)
	M		
TB6-41	N	641	CHECK ENGINE LIGHT ALARM
	O		
TB6-42	P	642	LOW COOLANT PRESSURE ALARM
TB6-40	Q	640	HIGH COOLANT TEMP ALARM
	R		
	S		
	T		
TB6-23	U	623	RPM REFERENCE INPUT (ANALOG)
TB6-20	V	620	ALT VSG
TB6-21	W	621	IGNITION-RECEIVER 1 (RUN)
TB6-26	X	626	SAE J1708/J1587 DIAG. "+"
TB6-25	Y	625	SAE J1708/J1587 DIAG. "-"
	Z		
	a		
	b-c-d		
	e		
TB6-22	f	622	RPM REFERENCE + (5VDC POSITIVE)
	g		
	h-j-k		
	m-n-p		
	q-r-s		
	t		
TB6-21	u	621A	IGNITION-SENDER (RUN)
TB6-21	v	621B	IGNITION-RECEIVER 2 (RUN)
	w		
	x-y		
	z		

CONTRACT NO.		STEWART & STEVENSON SERVICES P.O. BOX 1637 HOUSTON, TEXAS, U.S.A.
DRAWN TONY NGUYEN	DATE 3/09	TITLE SYSTEM INTERCONNECTION WD
CHECK T.NGUYEN	3/09	
DESIGN C.HUELSMAN	3/09	
DESIGN ACTIVITY		SIZE D · FSCM NO. 81381 · DWG NO. 26111180 E
CUSTOMER		SCALE N/A · RELEASE DATE · SHEET 4 OF 5

RELEASED

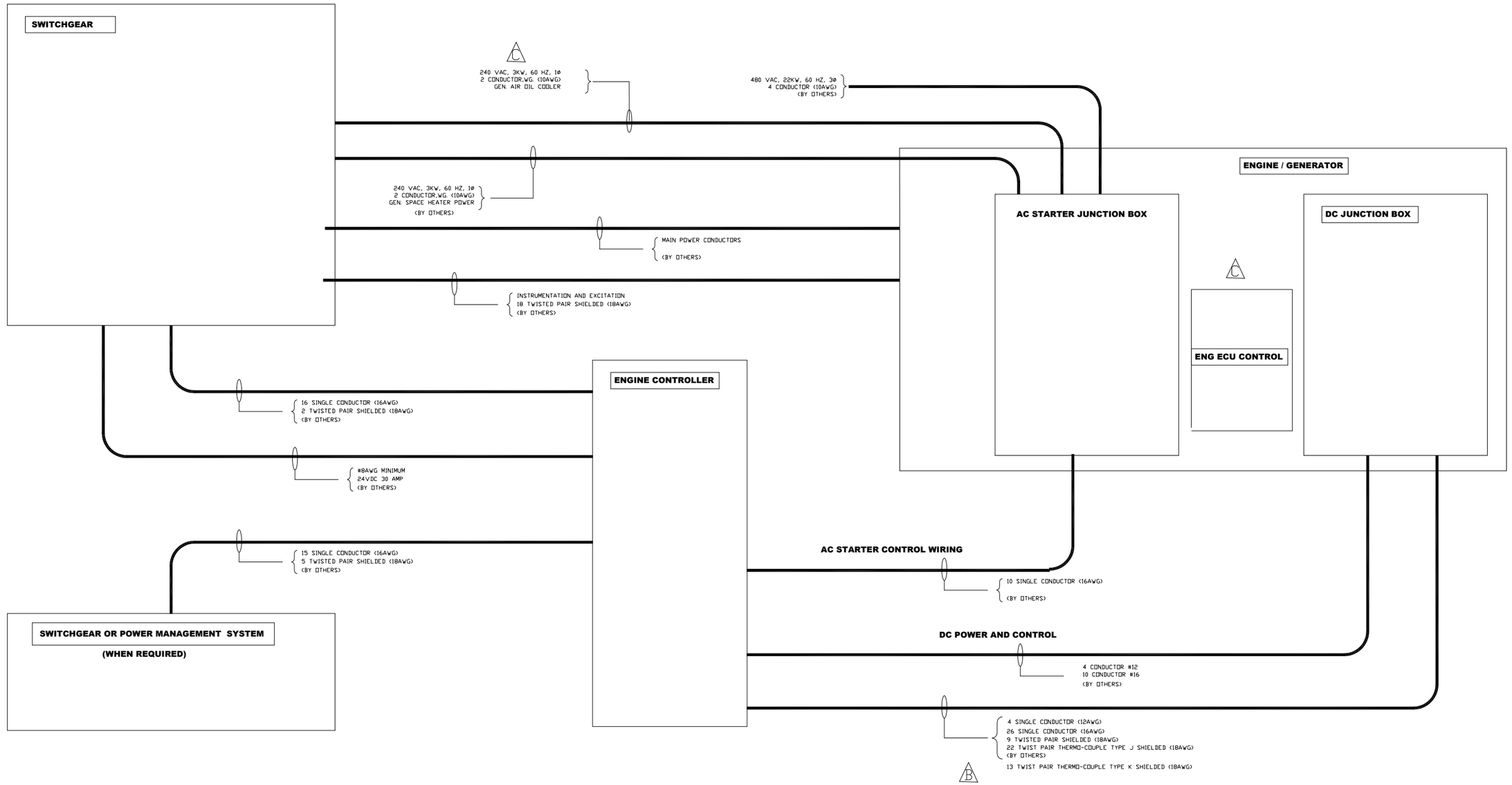

CONTRACT NO.		STEWART & STEVENSON SERVICES P.O. BOX 1637 HOUSTON, TEXAS, U.S.A.
DRAWN C.HUELSMAN	DATE 3/09	TITLE SYSTEM INTERCONNECTION WD
CHECK T. NGUYEN	3/09	
DESIGN C.HUELSMAN	3/09	
DESIGN ACTIVITY		SIZE D · FSCM NO. 81381 · DWG NO. 26111180 E
CUSTOMER		SCALE N/A · RELEASE DATE · SHEET 5 OF 5

RELEASED

C:\Vault Work\Product Data\Generators\Projects\ISO 6098943 Noble Drilling Segerius (60 Hz)\26110754 Top Level\26111181.dwg

REVISION HISTORY					
REV	DESCRIPTION	DESIGNER	CHECKED BY	ENGINEER	APP. DATE
D	ECO-001866	CH	TN	CH	09/09
E	ECO-005052	CH	TN	CH	11/10

REVISION HISTORY					
REV	DESCRIPTION	DESIGNER	CHECKED BY	ENGINEER	APP. DATE
A	ECN 000773	CH	TN	CH	03/09
B	ECO-001366	CH	TN	CH	06/09
C	ECO-001715	CH	TN	CH	07/09

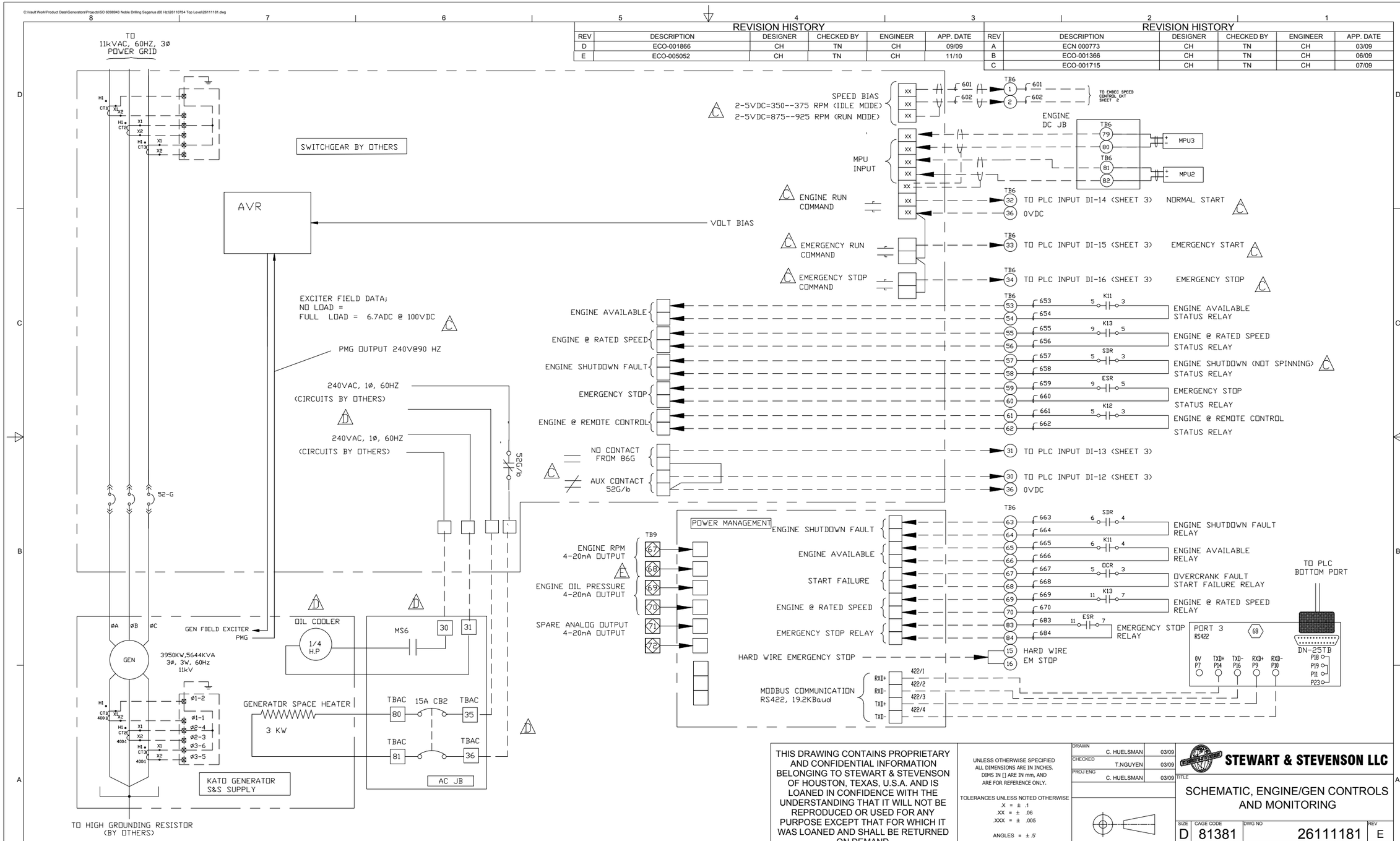

THIS DRAWING CONTAINS PROPRIETARY AND CONFIDENTIAL INFORMATION BELONGING TO STEWART & STEVENSON OF HOUSTON, TEXAS, U.S.A. AND IS LOANED IN CONFIDENCE WITH THE UNDERSTANDING THAT IT WILL NOT BE REPRODUCED OR USED FOR ANY PURPOSE EXCEPT THAT FOR WHICH IT WAS LOANED AND SHALL BE RETURNED ON DEMAND.

UNLESS OTHERWISE SPECIFIED ALL DIMENSIONS ARE IN INCHES. DIMS IN [] ARE IN mm, AND ARE FOR REFERENCE ONLY.

TOLERANCES UNLESS NOTED OTHERWISE
.X = ± .1
.XX = ± .06
.XXX = ± .005

ANGLES = ± .5°

DRAWN	C. HUELSMAN	03/09
CHECKED	T.NGUYEN	03/09
PROJ ENG	C. HUELSMAN	03/09

THIRD ANGLE PROJECTION

STEWART & STEVENSON LLC

TITLE: SCHEMATIC, ENGINEER/GEN CONTROLS AND MONITORING

SIZE	CAGE CODE	DWG NO	REV
D	81381	26111181	E

SCALE: NTS FILE: 26111181.dwg SHEET 1 OF 9

RELEASED

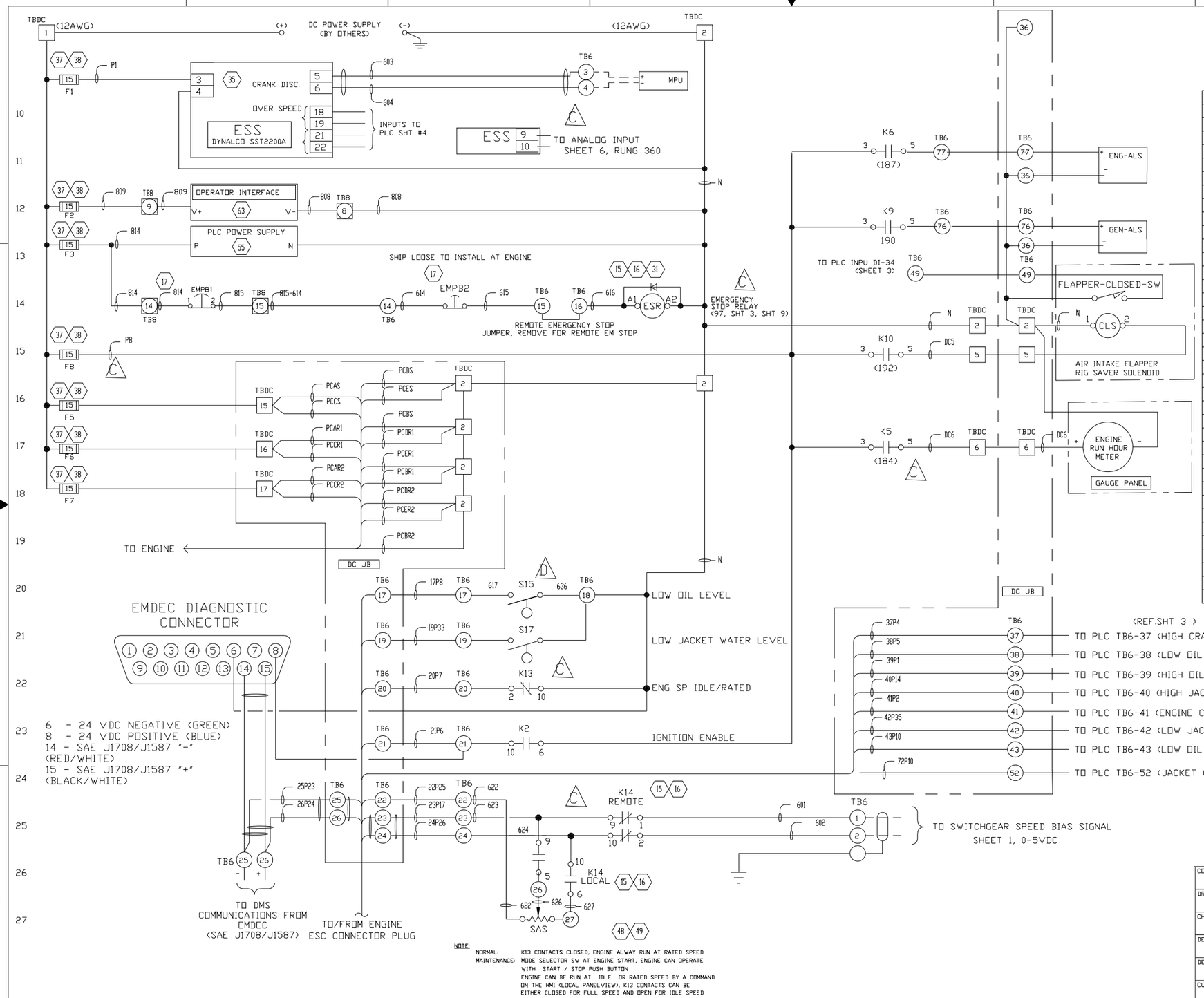

TB	PIN	WIRE #	FUNCTION
TB6-39		EHC3Y	HOT HENGINE OIL FAULT ALARM
TB6-41		VHC1B	CHECK ENGINE LIGHT ALARM
		VHC2B	STOP ENGINE LIGHT ALARM
TB6-37		EHC3W	CRANKCASE PRESSURE FAULT ALARM
TB6-38		EHC3X	LOW OIL PRESSURE FAULT ALARM
TB6-21		VHC3B3	IGNITION OR "RUN"
TB6-20		VHC1E	ENGINE SPEED IDLE/RATED
TB6-40		VHC1A	JACKET WATER HIGH TEMPERATURE ALARM
TB6-23		VHC1D3	ENGINE SPEED INPUT
TB6-25		VHC1C3	SAE J1708/J1587 DIAG. "-"
TB6-26		VHC2C3	SAE J1708/J1587 DIAG. "+"
TB6-22		VHC3A	5VDC SENSOR SUPPLY: SENDER ECM
TB6-24		VHC3C	0VDC SENSOR RETURN: SENDER ECM
		E2P1	AVAILABLE SPARE: PSI SENSOR
		E1N1	AVAILABLE SPARE: PSI SENSOR
TB6-72		E1M1	AVAILABLE SPARE: PSI SENSOR (JCPLA)
TB6-19		V1E1	LOW JACKET WATER INPUT
TB6-42		V1A1	LOW JACKET WATER LEVEL OUTPUT

NOTES:

SPEED SETTINGS FOR EMDEC
1. VSG MIN = 350 RPM
2. VSG MAX = 925 RPM
3. ALT VSG MIN = 622 RPM

NOTE:
NORMAL: K13 CONTACTS CLOSED, ENGINE ALWAY RUN AT RATED SPEED
MAINTENANCE: MODE SELECTOR SW AT ENGINE START, ENGINE CAN OPERATE WITH START / STOP PUSH BUTTON
ENGINE CAN BE RUN AT IDLE OR RATED SPEED BY A COMMAND ON THE HMI (LOCAL PANELVIEW), K13 CONTACTS CAN BE EITHER CLOSED FOR FULL SPEED AND OPEN FOR IDLE SPEED

CONTRACT NO.		STEWART & STEVENSON SERVICES P.O. BOX 1637 HOUSTON, TEXAS, USA
DRAWN C.HUELSMAN	DATE 6/09	TITLE SCHEMATIC ENGINE/GENERATOR CONTROL AND MONITORING
CHECK T. NGUYEN	6/09	
DESIGN C.HUELSMAN	6/09	
DESIGN ACTIVITY		SIZE D · FSCM NO. 81381 · DWG NO. 26111181 · REV. E
CUSTOMER		SCALE NONE · RELEASE DATE · SHEET 2 OF 9

RELEASED

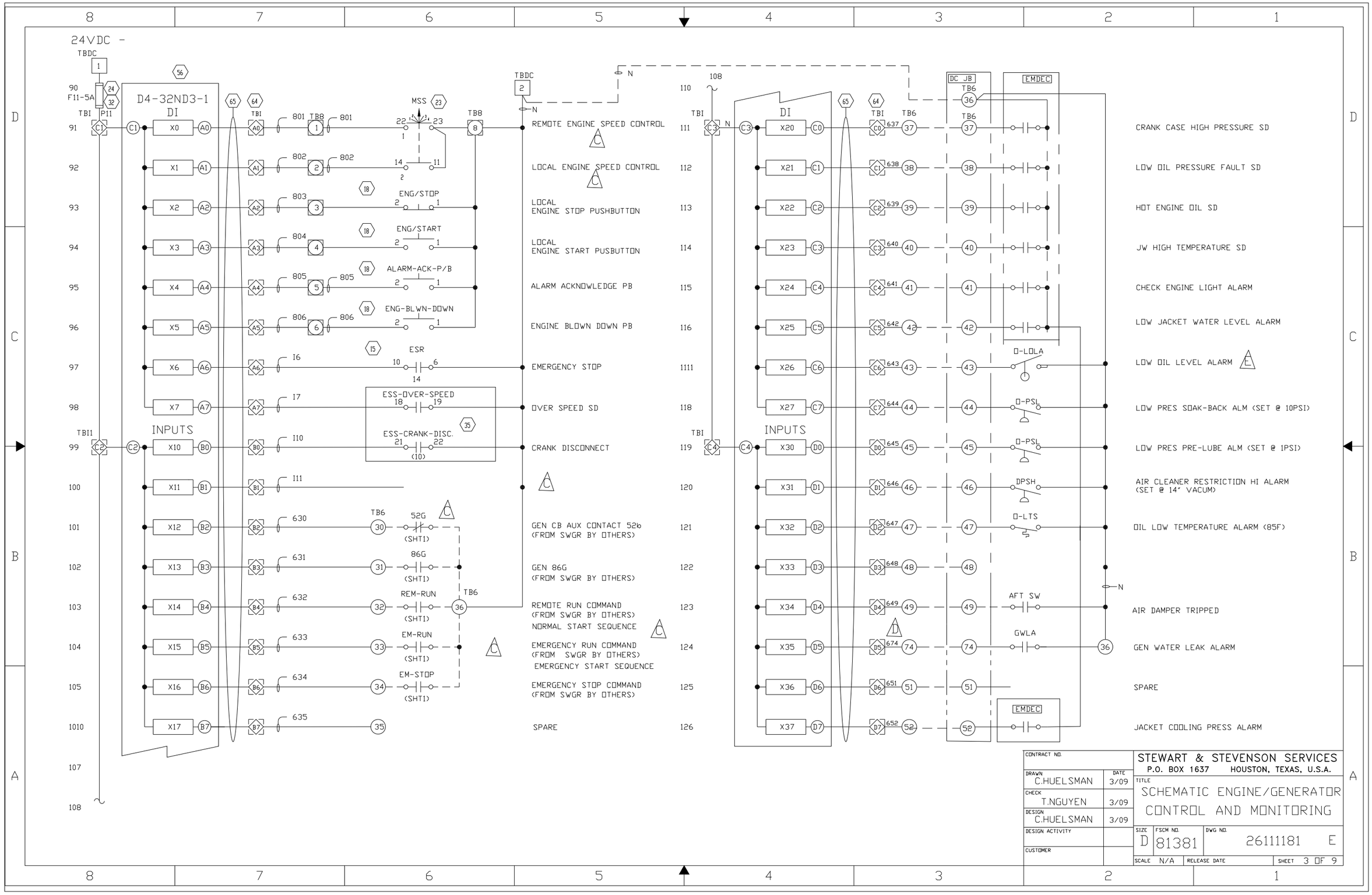
24VDC -
TBDC
F11-5A
D4-32ND3-1
DI
INPUTS
MSS
ENG/STOP
ENG/START
ALARM-ACK-P/B
ENG-BLWN-DOWN
ESR
ESS-OVER-SPEED
ESS-CRANK-DISC.
52G
86G
REM-RUN
EM-RUN
EM-STOP
REMOTE ENGINE SPEED CONTROL
LOCAL ENGINE SPEED CONTROL
LOCAL ENGINE STOP PUSHBUTTON
LOCAL ENGINE START PUSBUTTON
ALARM ACKNOWLEDGE PB
ENGINE BLOWN DOWN PB
EMERGENCY STOP
OVER SPEED SD
CRANK DISCONNECT
GEN CB AUX CONTACT 52b (FROM SWGR BY OTHERS)
GEN 86G (FROM SWGR BY OTHERS)
REMOTE RUN COMMAND (FROM SWGR BY OTHERS)
NORMAL START SEQUENCE
EMERGENCY RUN COMMAND (FROM SWGR BY OTHERS)
EMERGENCY START SEQUENCE
EMERGENCY STOP COMMAND (FROM SWGR BY OTHERS)
SPARE
DC JB
EMDEC
CRANK CASE HIGH PRESSURE SD
LOW OIL PRESSURE FAULT SD
HOT ENGINE OIL SD
JW HIGH TEMPERATURE SD
CHECK ENGINE LIGHT ALARM
LOW JACKET WATER LEVEL ALARM
LOW OIL LEVEL ALARM
LOW PRES SOAK-BACK ALM (SET @ 10PSI)
LOW PRES PRE-LUBE ALM (SET @ 1PSI)
AIR CLEANER RESTRICTION HI ALARM (SET @ 14" VACUM)
OIL LOW TEMPERATURE ALARM (85F)
AIR DAMPER TRIPPED
GEN WATER LEAK ALARM
SPARE
JACKET COOLING PRESS ALARM
AFT SW
GWLA
CONTRACT NO.
DRAWN C.HUELSMAN 3/09
CHECK T.NGUYEN 3/09
DESIGN C.HUELSMAN 3/09
DESIGN ACTIVITY
CUSTOMER
STEWART & STEVENSON SERVICES
P.O. BOX 1637 HOUSTON, TEXAS, U.S.A.
TITLE
SCHEMATIC ENGINE/GENERATOR CONTROL AND MONITORING
SIZE D
FSCM NO. 81381
DWG NO. 26111181 E
SCALE N/A
RELEASE DATE
SHEET 3 OF 9

RELEASED

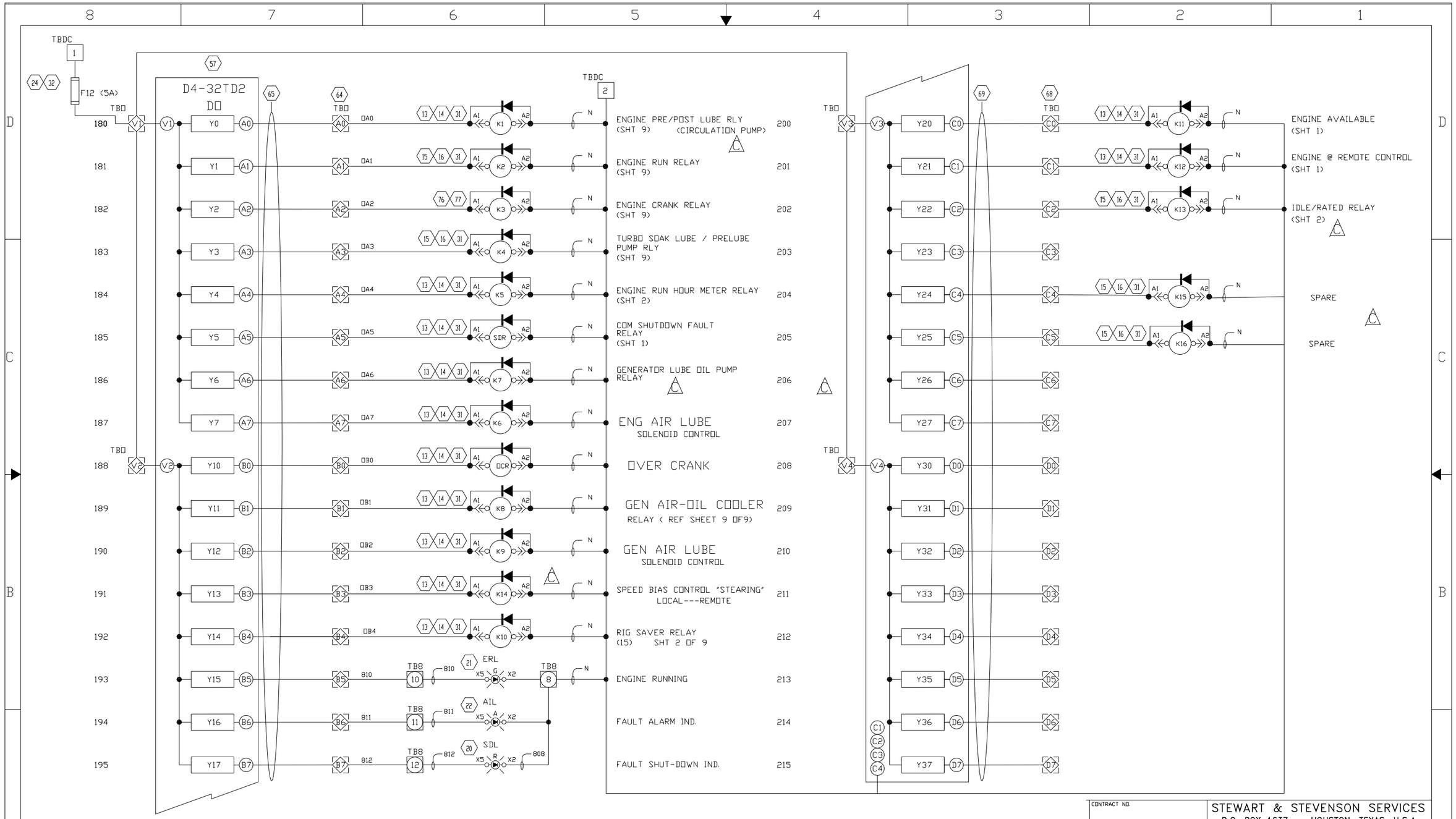

CONTRACT NO.		STEWART & STEVENSON SERVICES P.O. BOX 1637 HOUSTON, TEXAS, U.S.A.
DRAWN C.HUELSMAN	DATE 3/09	TITLE SCHEMATIC ENGINE/GENERATOR CONTROL AND MONITORING
CHECK T.NGUYEN	3/09	
DESIGN C.HUESMAAN	3/09	
DESIGN ACTIVITY		SIZE D · FSCM NO. 81381 · DWG NO. 26111181 E
CUSTOMER		SCALE N/A · RELEASE DATE · SHEET 4 OF 9

RELEASED

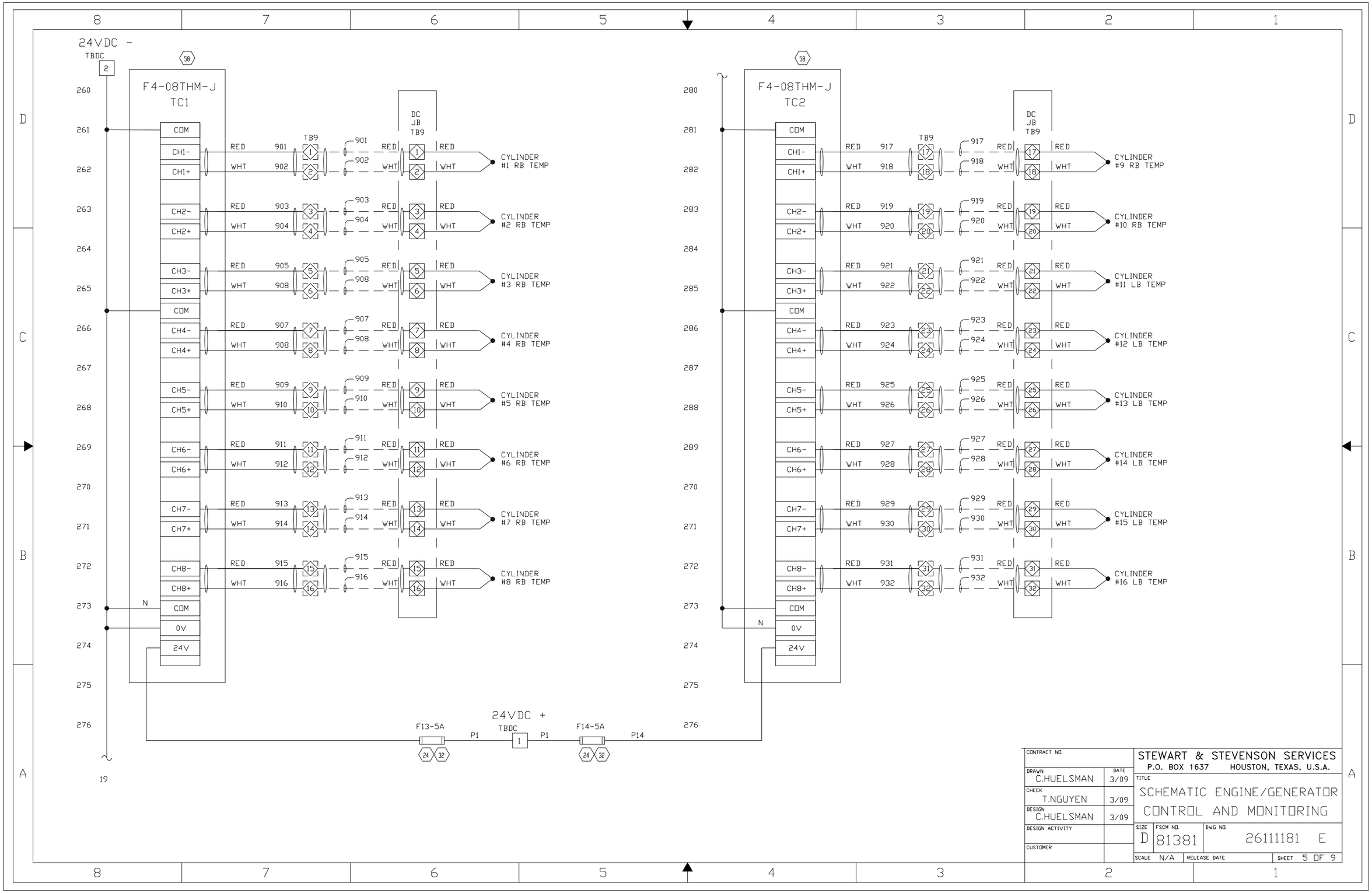

CONTRACT NO.		STEWART & STEVENSON SERVICES P.O. BOX 1637 HOUSTON, TEXAS, U.S.A.
DRAWN C.HUELSMAN	DATE 3/09	TITLE SCHEMATIC ENGINE/GENERATOR CONTROL AND MONITORING
CHECK T.NGUYEN	3/09	
DESIGN C.HUELSMAN	3/09	
DESIGN ACTIVITY		SIZE D · FSCM NO. 81381 · DWG NO. 26111181 E
CUSTOMER		SCALE N/A · RELEASE DATE · SHEET 5 OF 9

RELEASED

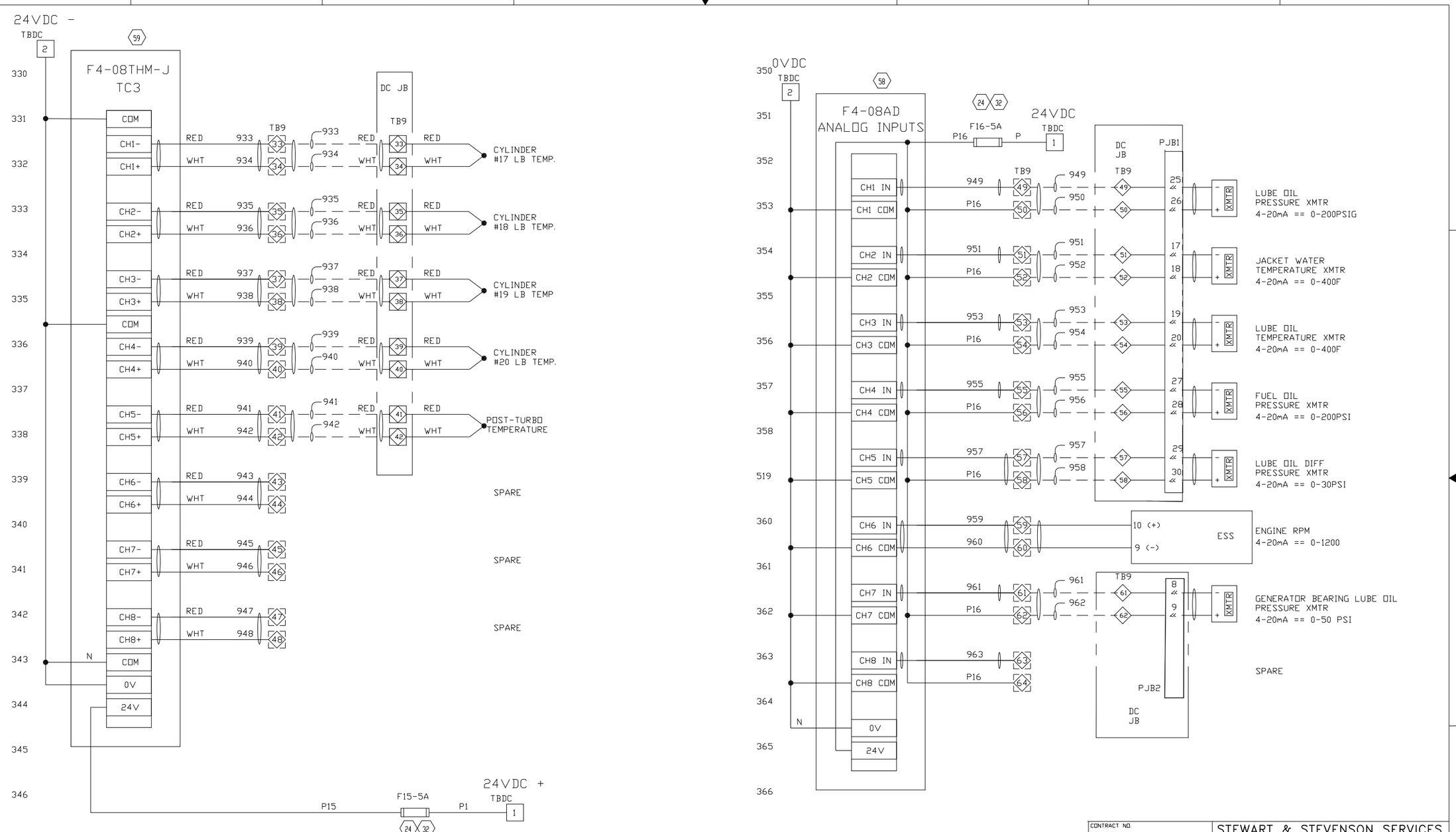

CONTRACT NO.		STEWART & STEVENSON SERVICES P.O. BOX 1637 HOUSTON, TEXAS, U.S.A.
DRAWN C.HUELSMAN	DATE 3/09	TITLE ENGINE / GENERATOR CONTROL AND MONITORING
CHECK T.NGUYEN	3/09	
DESIGN C.HUELSMAN	3/09	
DESIGN ACTIVITY		SIZE D · FSCM NO. 81381 · DWG NO. 26111181 E
CUSTOMER		SCALE N/A · RELEASE DATE · SHEET 6 OF 9

RELEASED

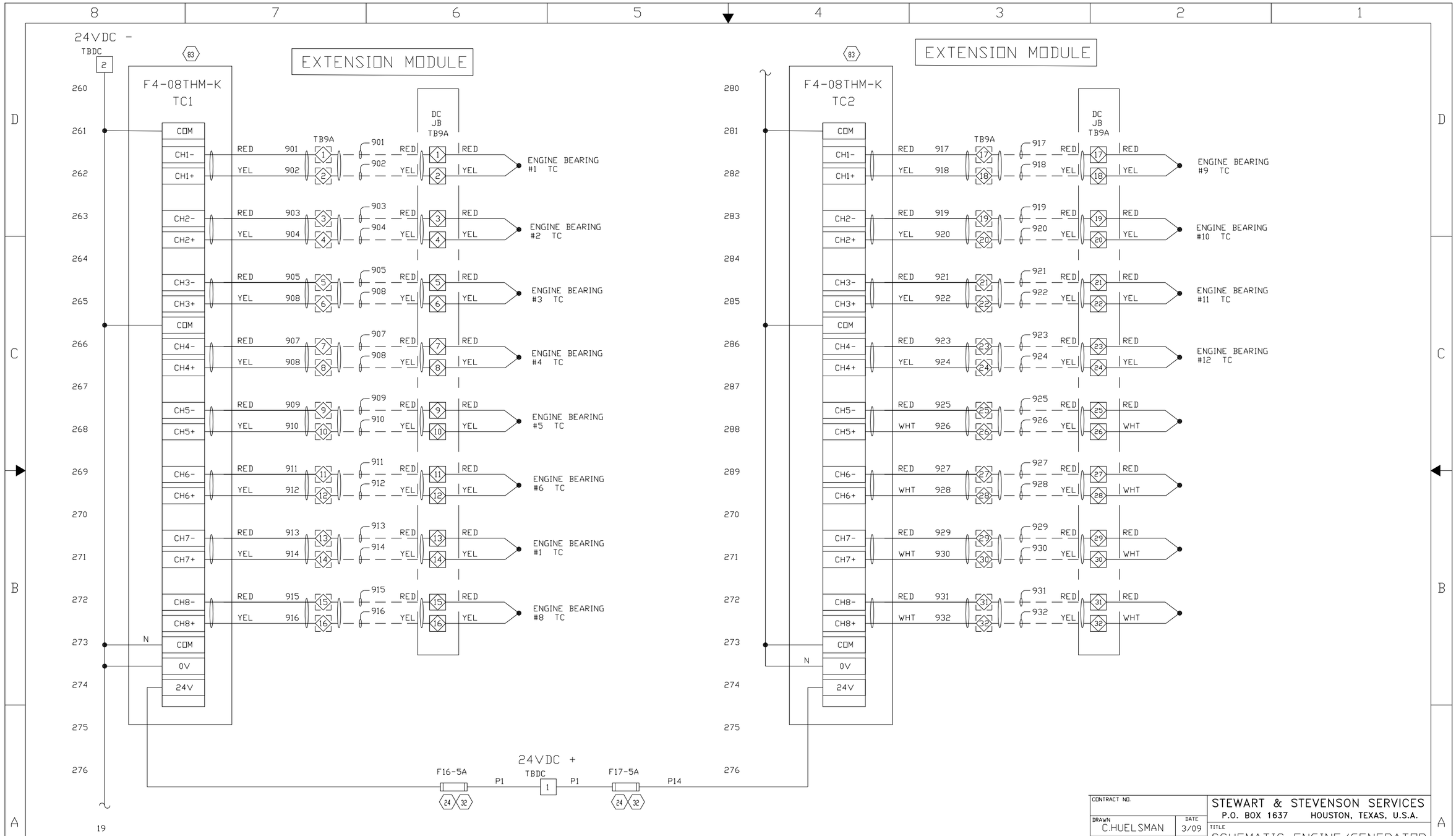

CONTRACT NO.		STEWART & STEVENSON SERVICES P.O. BOX 1637 HOUSTON, TEXAS, U.S.A.
DRAWN C.HUELSMAN	DATE 3/09	TITLE SCHEMATIC ENGINE/GENERATOR CONTROL AND MONITORING
CHECK T.NGUYEN	3/09	
DESIGN C.HUELSMAN	3/09	
DESIGN ACTIVITY		SIZE D · FSCM NO. 81381 · DWG NO. 26111181 E
CUSTOMER		SCALE N/A · RELEASE DATE · SHEET 7 of 9

RELEASED

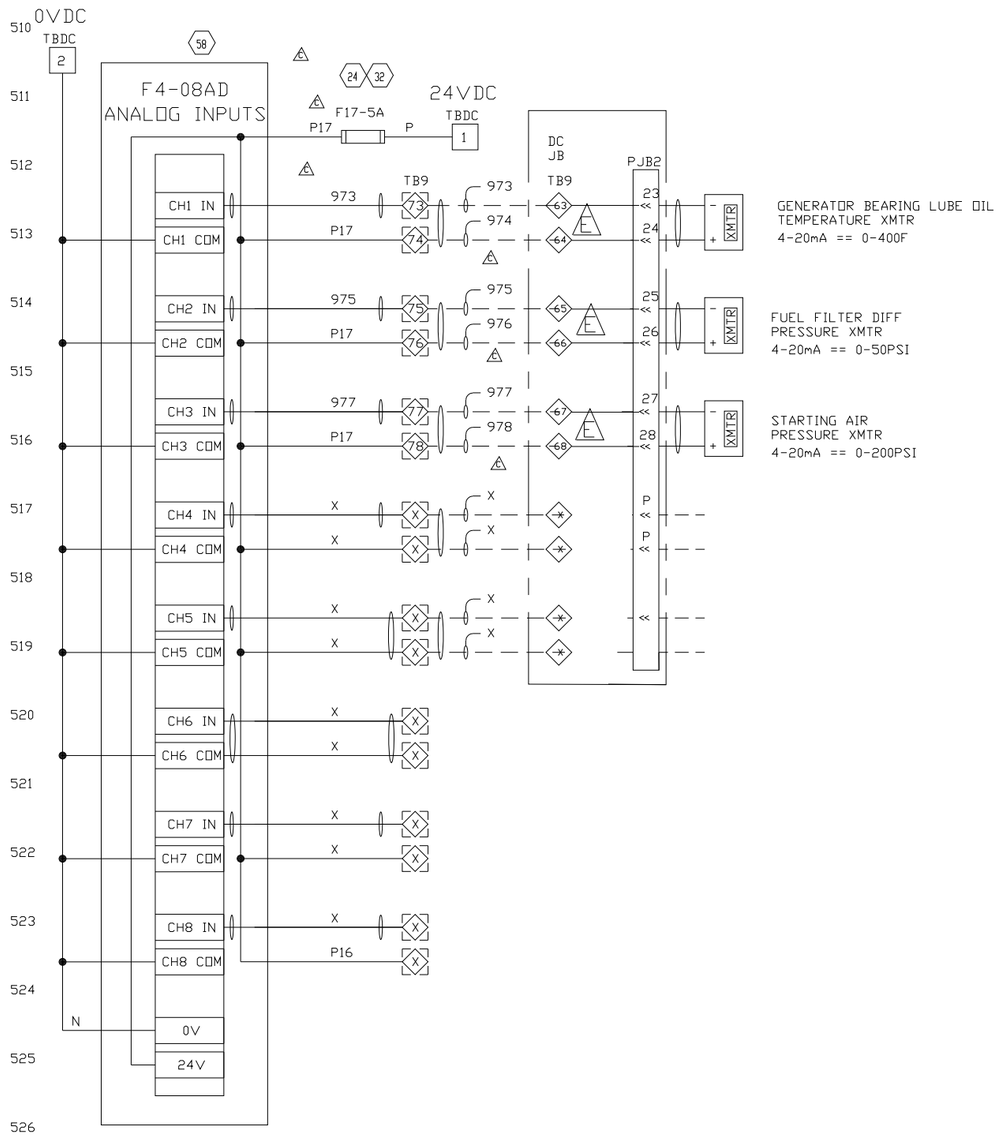

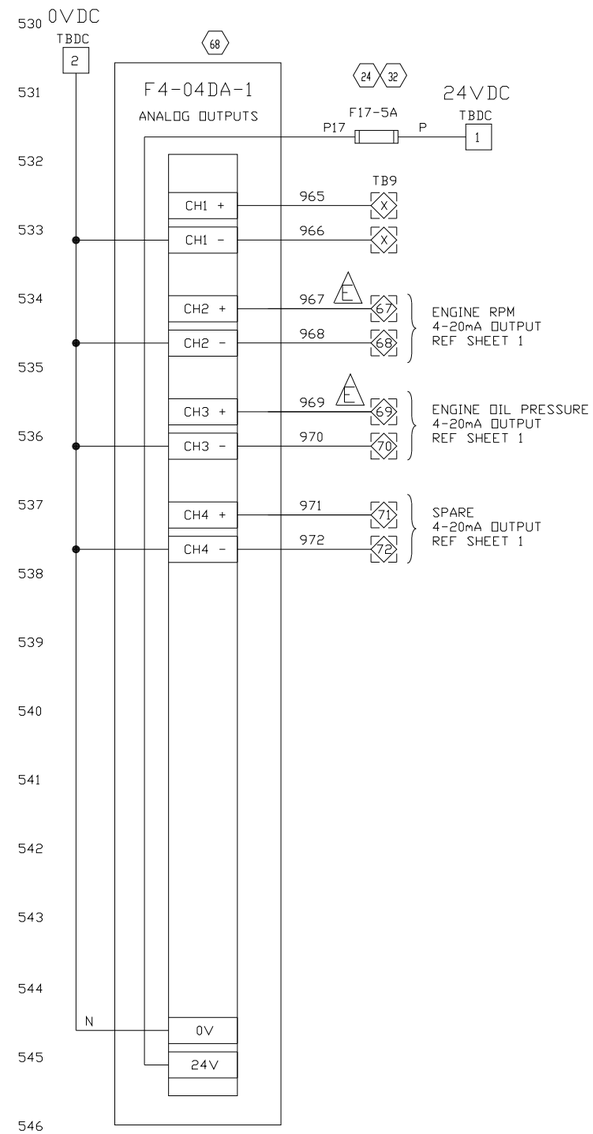

CONTRACT NO.		STEWART & STEVENSON SERVICES P.O. BOX 1637 HOUSTON, TEXAS, U.S.A.
DRAWN C.HUELSMAN	DATE 3/09	TITLE
CHECK T. NGUYEN	3/09	SCHEMATIC ENGINE GEN CONTROLAND MONITORING
DESIGN C.HUELSMAN	3/09	
DESIGN ACTIVITY		SIZE D · FSCM NO. 81381 · DWG NO. 26111181 E
CUSTOMER		SCALE N/A · RELEASE DATE · SHEET 8 OF 9

RELEASED

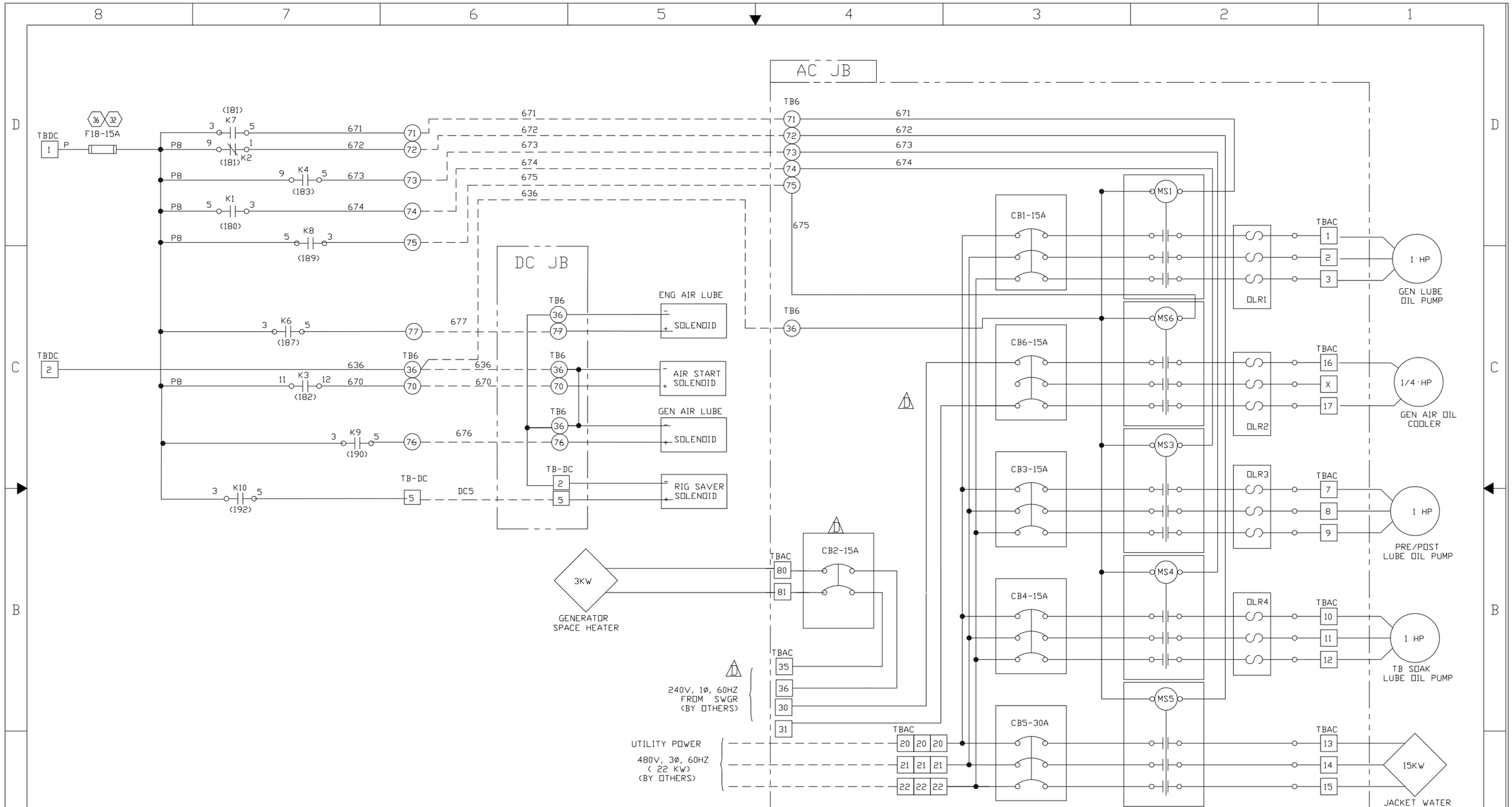

CONTRACT NO.		STEWART & STEVENSON SERVICES P.O. BOX 1637 HOUSTON, TEXAS, U.S.A.
DRAWN C.HUELSMAN	DATE 3/09	TITLE
CHECK T.NGUYEN	3/09	SCHEMATIC ENGINE GEN CONTROL AND MONITORING
DESIGN C.HUELSMAN	3/09	
DESIGN ACTIVITY		SIZE D · FSCM NO. 81381 · DWG NO. 26111181 E
CUSTOMER		SCALE N/A · RELEASE DATE · SHEET 9 OF 9

RELEASED

REVISION HISTORY

REV	DESCRIPTION	DESIGNER	CHECKED BY	ENGINEER	APP. DATE
-	INITIAL RELEASE PER ECO-001140	BEEKEN	M. AALY	M. KOTHARI	5/8/2009
A	REVISED PER ECO-001241	B. LUTZ	M. AALY	M. AALY	5/21/2009
B	REVISED PER ECO-001939	I. BOERU	M. AALY	M. AALY	9/10/2009

NOTES:

1. APPLICABLE STANDARDS/SPECIFICATIONS:
   A. ASME Y 14.5M-1994
2. PART TO BE FREE OF BURRS AND SHARP CORNERS.

PARTS LIST

FIND	QTY	PART NUMBER	TITLE
134	1	22602031	ADAPTER,STR,#16MJICX1"FNPT, SS
133	1	22602155	HYDRAULIC ADAPTER, 90 DEG, 3/4" MALE NPT X 3/4" MALE NPT, SS
132	1	20060326	COUPLING,PIPE,FLEX,3"
131	1	BM38776	UBOLT, 3" PIPE, 1/2-13 UNC X 3-1/2" ID X 5" LG
130	1	27103160	GUARD, SCREEN, OIL COOLER
129	1	27103517	PIPE, STL, 3", SCH 40, 39,00" LONG, TOE
128	1	27103499	BRACKET, SUPPORT, OIL FILTER
127	1	UB2PA	CLAMP,PIPE,U-BOLT,STL,2"
126	2	22602296	ADAPTER, SS, SWAGELOK, 3/4" TUBE TO 3/4" JIC
125	4	SS-1610-1-16	SS SWAGELOK TUBE FITTING, MALE CONNECTOR, 1" Tube OD X 1" MALE NPT
124	1	SS-1210-9	SS SWAGELOK TUBE FITTING, UNION ELBOW, 3/4" TUBE OD
123	1	SS-1210-3	SS SWAGELOK TUBE FITTING, UNION TEE, 3/4 IN. TUBE OD
122	2	SS-1210-1-12	SS SWAGELOK TUBE FITTING, MALE CONNECTOR, 3/4" TUBE OD X 3/4" MALE NPT
121	1	SF0125T	TEE,PIPE,THREADED,SS304,150#,1-1/4"NPT
120	3	SF0100L94	ELBOW,PIPE,THREADED,SS304,90DEG,150#,1"NPT
119	2	SF0012594	ELBOW,PIPE,STREET,SS304,150#,90DEG,3/4"NPT
118	4	NW0012CL44	NIPPLE,PIPE,TBE,SS304,SCH40,3/4"MNPT X CLOSE
117	1	BM38778	UBOLT, 4" PIPE, 1/2-13 UNC X 4-1/2" ID X 6" LG
116	8	BM36786	NUT,HEX,LOCK, 5/8-11 UNC
115	10	BM36785	NUT,HEX,LOCK, 9/16-12 UNC
114	25	BM36784	NUT,HEX,LOCK, 1/2-13 UNC
113	12	BM36783	NUT,HEX,LOCK, 7/16-14 UNC
112	6	BM36782	NUT,HEX,LOCK, 3/8-16 UNC
111	6	BM36781	NUT,HEX,LOCK, 5/16-18 UNC
110	26	BM36780	NUT,HEX,LOCK, 1/4-20 UNC
109	12	AEW26X62R000WB0A91	WASHER, PLAIN, 5/8 - REGULAR - TYPE B
108	20	AEW26X56R000WB0A91	WASHER, PLAIN, 9/16 - REGULAR - TYPE B
107	14	AEW26X50R000WB0A91	WASHER, PLAIN, 1/2 - REGULAR - TYPE B
106	24	AEW26X43R000WB0A91	WASHER, PLAIN, 7/16 - REGULAR - TYPE B
105	10	AEW26X37R000WB0A91	WASHER, PLAIN, 3/8 - REGULAR - TYPE B
104	16	AEW26X32R000WB0A91	WASHER, PLAIN, 5/16 - REGULAR - TYPE B
103	54	AEW26X25R000WB0A91	WASHER, PLAIN, 1/4 - REGULAR - TYPE B
102	32	AEW24X50W000WB0A91	WASHER, PLAIN, 1/2 - WIDE - TYPE A
101	6	AES01C625B50WA6A91	CAP SCREW, HEX HEAD, 5/8-11 UNC X 2.5 LG.
100	4	AES01C562B25WA6A91	CAP SCREW, HEX HEAD, 9/16-12 UNC X 2.25 LG.
99	2	AES01C562B00WA6A91	CAP SCREW, HEX HEAD, 9/16-12 UNC X 2 LG.
98	2	AES01C562A75WA6A91	CAP SCREW, HEX HEAD, 9/16-12 UNC X 1.75 LG.
97	4	AES01C500C50WA6A91	CAP SCREW, HEX HEAD, 1/2-13 UNC X 3.5 LG.
96	13	AES01C500B00WA6A91	CAP SCREW, HEX HEAD, 1/2-13 UNC X 2 LG.
95	4	AES01C500A25WA6A91	CAP SCREW, HEX HEAD, 1/2-13 UNC X 1.25 LG.
94	12	AES01C438A50WA6A91	CAP SCREW, HEX HEAD, 7/16-14 UNC X 1.5 LG.
93	3	AES01C375B00WA6A91	CAP SCREW, HEX HEAD, 3/8-16 UNC X 2 LG.
92	1	AES01C375A25WA6A91	CAP SCREW, HEX HEAD, 3/8-16 UNC X 1.25 LG.
91	10	AES01C312A00WA6A91	CAP SCREW, HEX HEAD, 5/16-18 UNC X 1 LG.
90	6	AES01C250B87WA6A91	CAP SCREW, HEX HEAD, 1/4-20 UNC X 3 LG.
89	8	AES01C250B25WA6A91	CAP SCREW, HEX HEAD, 1/4-20 UNC X 2.25 LG.
88	4	AES01C250A25WA6A91	CAP SCREW, HEX HEAD, 1/4-20 UNC X 1.25 LG.
87	24	AES01C250875WA6A91	CAP SCREW, HEX HEAD, 1/4-20 UNC X 0.875 LG.
86	1	88113	ELBOW,PIPE,STREET,STL,150#,90DEG,3"NPT
85	1	88069	TEE,PIPE,THREADED,STL,150#,2"NPT
84	2	87899	ELBOW,PIPE,THREADED,STL,90DEG,150#,3"NPT
83	2	79998	BUSHING,PIPE,STL,6000#,3"NPTM X 2"NPTF
82	2	79990	BUSHING,PIPE,STL,6000#,2"NPTM X 1-1/2"NPTF
81	1	79498	NIPPLE,PIPE,TBE,STL,SCH40,3"MNPT X 6"
80	1	59-006-01	STRAINER, "Y" TYPE, 1-1/4" NPTF, BRASS, 20 MESH SCREEN
79	4	24600371	Clamp Assy, Tube, SS, 3/4"
78	1	27101746	BRACKET,SUCTION TUBE DUAL SUPPORT
77	1	27101745	SPACER,SUCTION TUBE SUPPORT
76	1	27101739	SPACER,DRAIN PIPE FRONT SUPPORT
75	1	27101738	BRACKET,DRAIN PIPE FRONT SUPPORT
74	1	27101736	BRACKET,DRAIN PIPE SUPPORT
73	1	27101735	BRACKET,DRAIN PIPE REAR SUPPORT
72	1	27101734	MOUNT,BRACKET,TUBE SUPPORTS
71	1	27101732	BRACKET,SUCTION TUBE SUPPORT
70	1	27101731	SPACER, PNEUMATIC PUMP
69	1	27101729	BRACKET,DUPLEX FILTER

PARTS LIST

FIND	QTY	PART NUMBER	TITLE
68	1	27101723	PIPE, STL, 2", SCH 40, 21 1/2" LONG, TBE
67	1	27101722	PIPE, STL, 3", SCH 40, 16 7/8" LONG, TBE
66	1	27101719	PIPE, STL, 3", SCH 40, 105.00" LONG, TOE
65	1	27101715	TUBE, RND, SS, 3/4" OD, .065" WALL X 13 1/2" LONG
64	1	27101714	TUBE, RND, SS, 3/4" OD, .065" WALL X 74" LONG
63	1	27101704	CONDUIT, TEMPERATURE TRANSMITTER
62	1	27101703	TUBE, RND, SS, 3/4" OD, .065" WALL X 7.25" LONG
61	4	27101702	TUBE, RND, SS, 3/4" OD, .065" WALL X 8" LONG
60	1	27101701	TUBE, RND, SS, 1" OD, .065" WALL X 8" LONG
59	1	27101700	TUBE, RND, SS, 1" OD, .065" WALL X 20" LONG
58	2	27101699	MOUNT, BRACKET, COOLER TT-208
57	1	27101024	MOUNT,HYDRAULIC TANK
56	1	27101008	HYDRAULIC TANK, 25 GALLON
55	4	26104760	SPACER, LUBE OIL PUMP MOUNTING, DM3865E GENERATOR
54	5	26102559	WELDMENT, SUPPORT, PIPE, UNIVERSAL, DM3865E GENERATOR
53	2	24643	CLAMP,PIPE,U-BOLT,STL,3"
52	1	24600393	Clamp Assy, Tube, SS, 1"
51	2	24600379	Clamp Assy, Pipe, SS, 1"
50	1	23800064	DUPLEX FILTER S 1555
49	1	23200077	COOLER,AIR/OIL,225.09 BTU/MIN
48	1	22700046	GAUGE,PRESSURE,0-60 PSI RANGE
47	1	22602291	HYDRAULIC ADAPTER, TEE, 1" MNPT X 1" FNPT RUN X 16 MJIC BRANCH, SS
46	2	22602290	ADAPTER,STR,#32MJICX2"FNPT, SS
45	2	22602289	ADAPTER,90°,#24MJICX1-1/2"FNPT, SS
44	1	22602263	UNION, ORIFICE SIZE 0.131", SS, 3/4" TUBE OD
43	1	22602262	UNION, ORIFICE SIZE 0.222", SS, 3/4" TUBE OD
42	1	22602124	ADAPTER,90°,#12MJICX3/4"MNPT, SS
41	7	22602123	ADAPTER,90°,#16MJICX1"MNPT, SS
40	1	22602116	ADAPTER,45°,#12MJICX3/4"MNPT, SS
39	4	22602115	ADAPTER,45°,#16MJICX1"MNPT, SS
38	2	22602113	ADAPTER,45°,#32MJICX2"MNPT, SS
37	1	21700003	CROSS, PIPE, 150#, 1" NPT, SS
36	2	22600553	ADAPTER,STR,#24MJICX1-1/2"MNPT, SS
35	1	22600241	SS SWAGELOK TUBE FITTING, FEMALE ELBOW, 3/4 IN. TUBE OD X 3/4 IN. FEMALE NPT
34	2	22600179	ADAPTER,STR,#16MJICX1"MNPT, SS
33	1	22400719	HOSE ASSY, FC355-12, #12FJX-#12FJX-22in
32	1	22400718	HOSE ASSEMBLY, FC355-12, #12FJX-#12FJX-31"
31	2	22400717	HOSE ASSEMBLY, FC355-24, #24FJX-#24FJX-27"
30	1	22400716	HOSE ASSEMBLY, FC355-16, #16FJX-#16FJX-27"
29	2	22400715	HOSE ASSEMBLY, FC355-16, #16FJX-#16FJX-23"
28	1	22400714	HOSE, ASSEMBLY, FC355-16, #16FJX,#16FJX-30"- 01
27	2	22400713	HOSE ASSEMBLY, FC355-32, #32FJX-#32FJX-25"
26	2	22400107	HOSE ASSEMBLY, FC355-16, #16FJX-#16FJX-18"
25	2	22400072	HOSE ASSEMBLY, FC355-16, #16FJX-#16FJX-26"
24	1	22100148	AIR DRIVEN OIL PUMP ASSEMBLY
23	1	22000265	VALVE, CHECK, 1", NPTF, BRASS, 20PSI CRACK
22	1	22000368	VALVE,BALL,SS,STD PORT,150#WSP,3/4"
21	3	22000007	VALVE,CHECK,1"NPTF
20	2	22000003	VALVE,NEEDLE,1/4",BRASS,MXF,3000 PSI
19	1	21900034	BUSHING,PIPE,SS,6000#,1"NPTM X 3/4"NPTF
18	2	21900033	BUSHING,PIPE,SS,6000#,1-1/4"NPTM X 1"NPTF
17	2	21900003	BUSHING,PIPE,SS,150#,3/4"NPTM X 1/4"NPTF
16	1	21700008	CROSS,PIPE,3000#, 3/4"NPTF, SS
15	1	216152	ELBOW,PIPE,THREADED,SS304,90DEG,150#,3/4"NPT
14	1	21600033	ELBOW,PIPE,THREADED,SS304,90DEG,150#,1-1/4"NPT
13	1	215121	TEE,PIPE,THREADED,SS304,150#,3/4"NPT
12	4	213146	NIPPLE,PIPE,TBE,SS304,SCH40,1"MNPT X 2"
11	1	213122	NIPPLE,PIPE,TBE,SS304,SCH40,1"MNPT X 4"
10	2	21300137	NIPPLE,PIPE,TBE,SS304,SCH40,3/4"MNPT X 2"
9	3	21300080	NIPPLE,PIPE,TBE,SS304,SCH40,1-1/4"MNPT X 2"
8	1	21300074	NIPPLE,PIPE,TBE,SS304,SCH40,1/4"MNPT X CLOSE
7	1	21300059	NIPPLE,PIPE,TBE,SS304,SCH40,1-1/4"MNPT X 4"
6	1	21300042	NIPPLE,PIPE,TBE,SS304,SCH40,1"MNPT X 4-1/2"
5	1	20060401	PRESSURE TRANSMITTER 0-100 PSI
4	1	20060400	TRANSMITTER, SENSOR, 4-20MA, 0-400 DEG. F.
3	1	20060355	VALVE,BALL,1-1/4" NPT
2	1	20060351	PUMP,LUBE OIL
1	1	12881402	TEE,PIPE,THREADED,STL,150#,3"NPT

UNLESS OTHERWISE SPECIFIED
ALL DIMENSIONS ARE IN INCHES.
DIMS IN [] ARE IN mm, AND
ARE FOR REFERENCE ONLY.

TOLERANCES UNLESS NOTED OTHERWISE
.X = ± .1
.XX = ± .06
.XXX = ± .005
ANGLES = ± .5°

DRAWN	I.BOERU	5/8/2009
CHECKED	M. AALY	5/8/2009
PROJ ENG	M. KOTHARI	5/8/2009

THIRD ANGLE PROJECTION

STEWART & STEVENSON LLC

TITLE
GENERATOR BEARING LUBE OIL SYSTEM, INSTALLATION, DM3580EG7C-T2

SIZE	CAGE CODE	DWG NO	REV
D	81381	27101001	B

SCALE: NTS FILE: 27101001.idw SHEET 1 OF 7

RELEASED

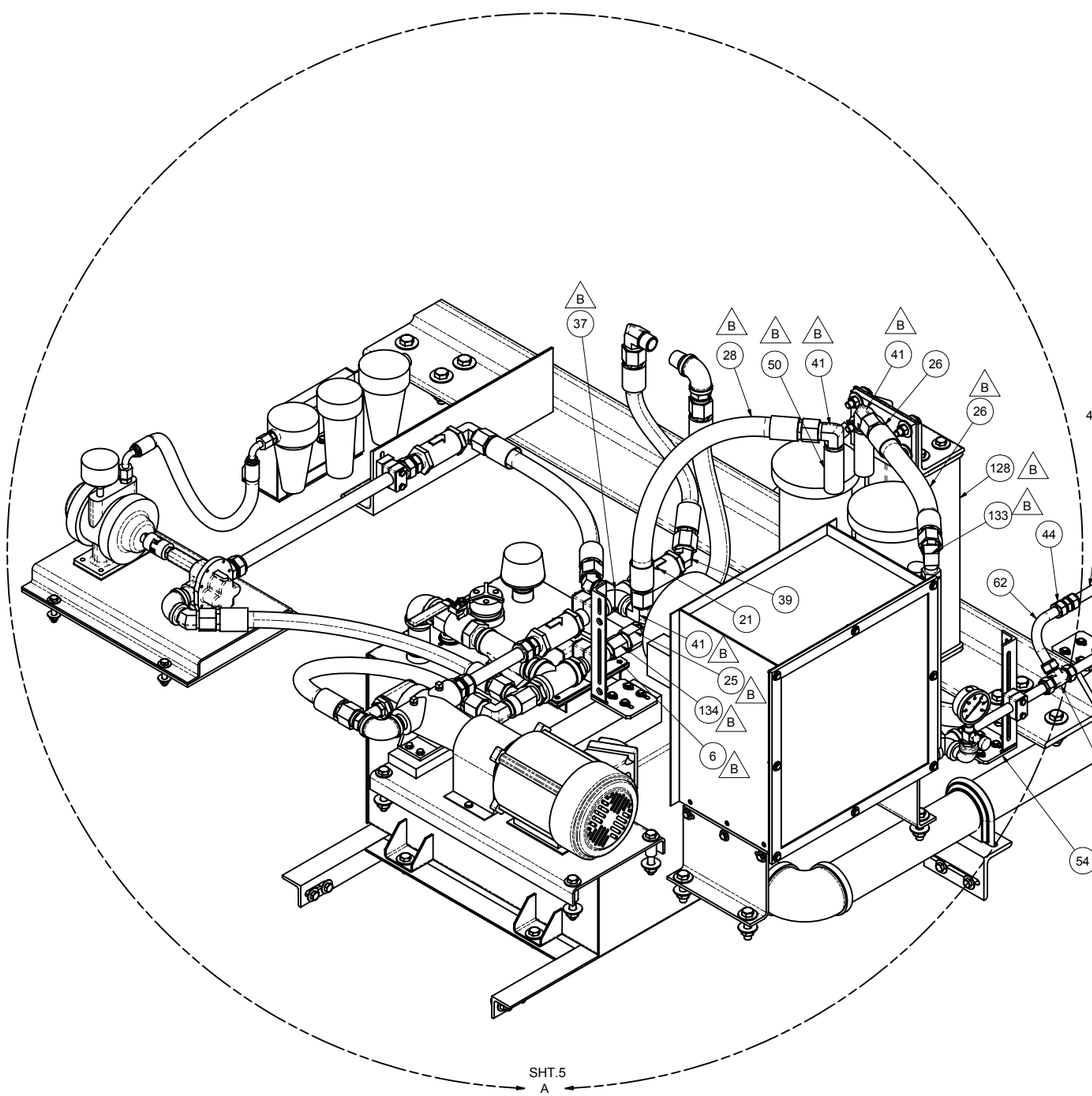

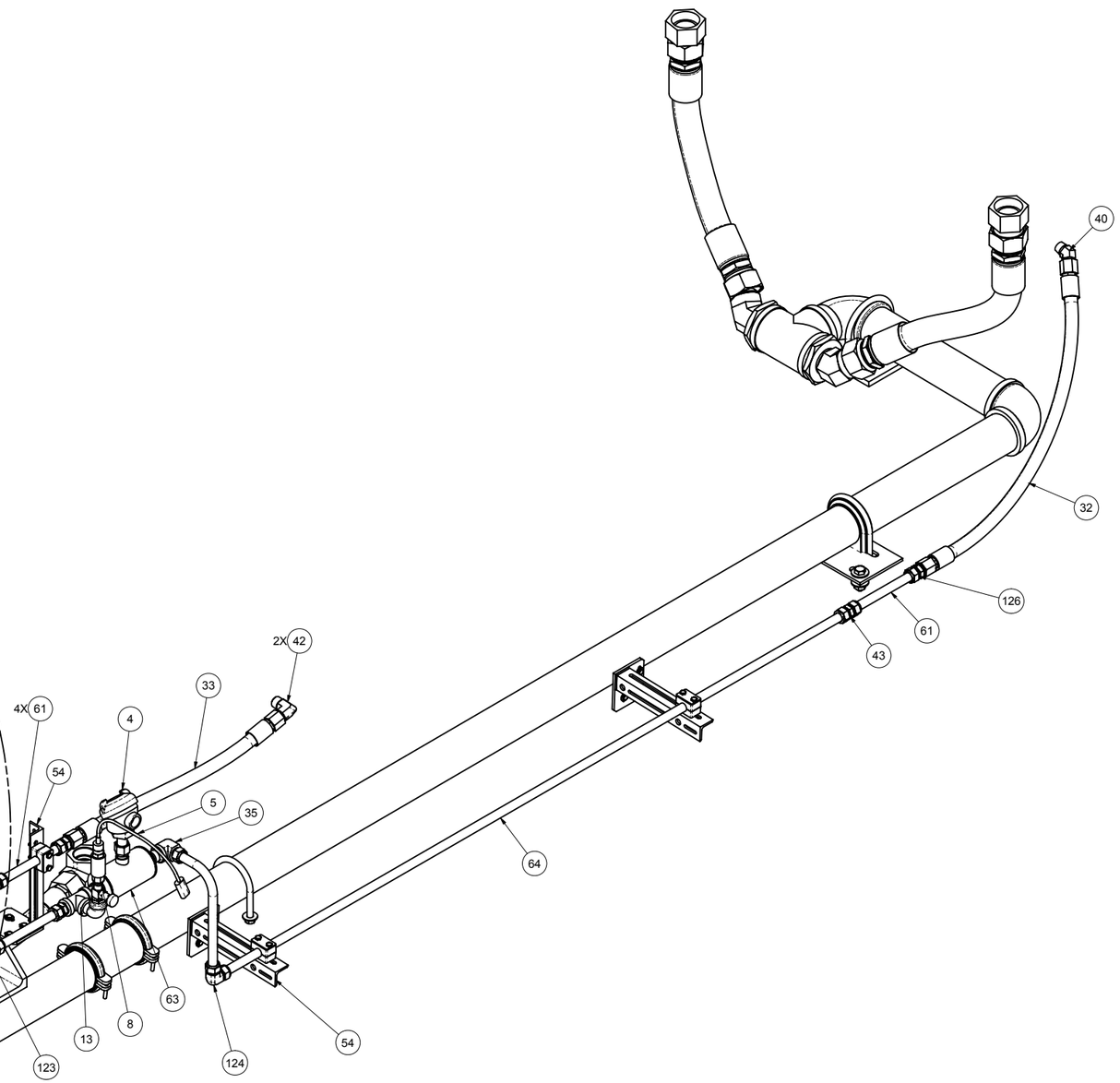

STEWART & STEVENSON LLC

TITLE
GENERATOR BEARING LUBE OIL SYSTEM, INSTALLATION, DM3580EG7C-T2

SIZE	CAGE CODE	DWG NO	REV
D	81381	27101001	B

SCALE: NTS | FILE: 27101001.idw | SHEET 2 OF 7

RELEASED

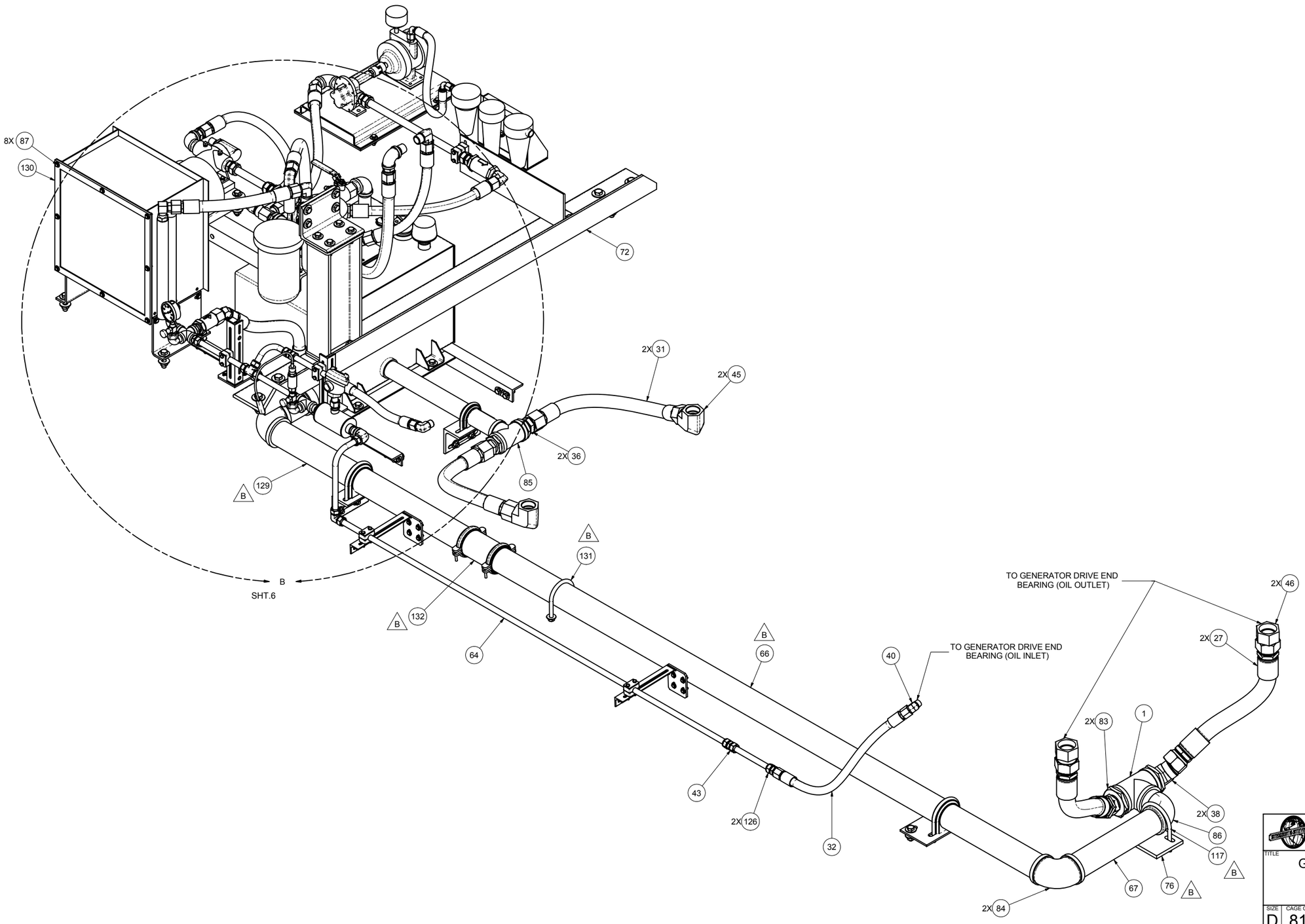

STEWART & STEVENSON LLC

TITLE
GENERATOR BEARING LUBE OIL SYSTEM, INSTALLATION, DM3580EG7C-T2

SIZE	CAGE CODE	DWG NO	REV
D	81381	27101001	B

SCALE: NTS | FILE: 27101001.idw | SHEET 3 OF 7

RELEASED

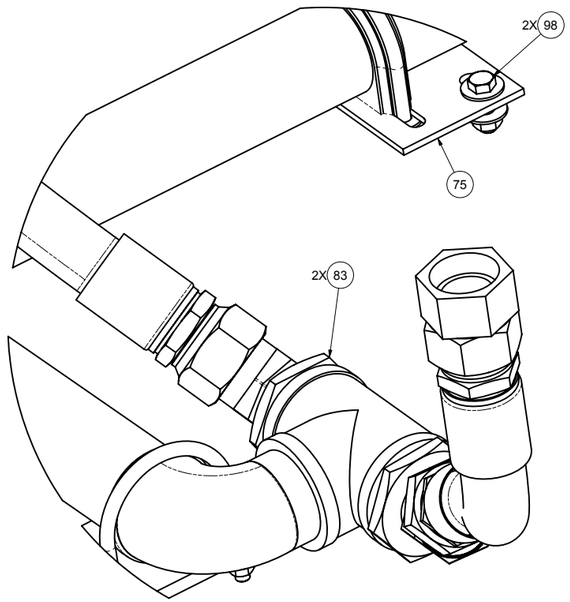

DETAIL C
SHT.4

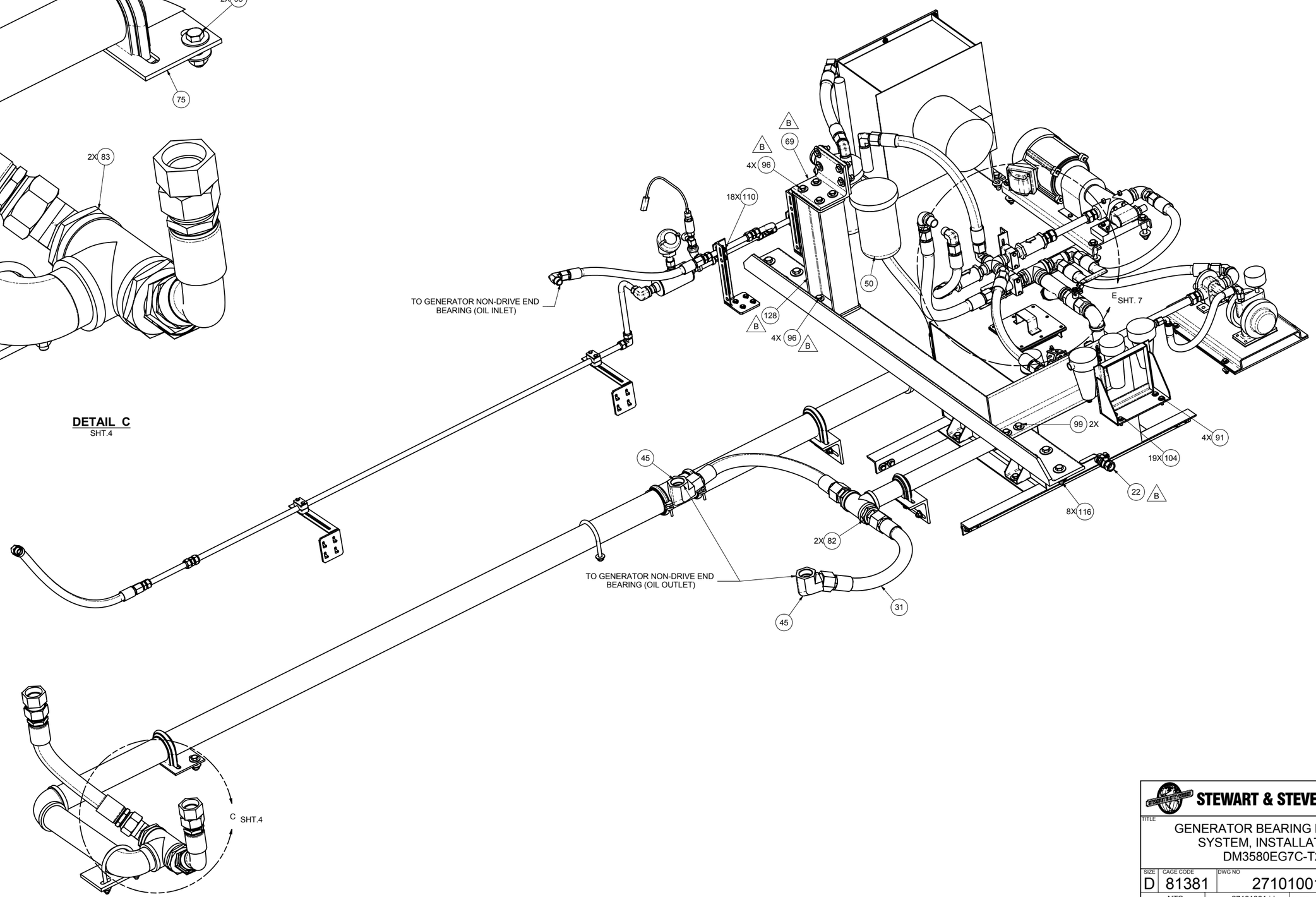

STEWART & STEVENSON LLC

TITLE
GENERATOR BEARING LUBE OIL SYSTEM, INSTALLATION, DM3580EG7C-T2

SIZE	CAGE CODE	DWG NO	REV
D	81381	27101001	B

SCALE: NTS | FILE: 27101001.idw | SHEET 4 OF 7

RELEASED

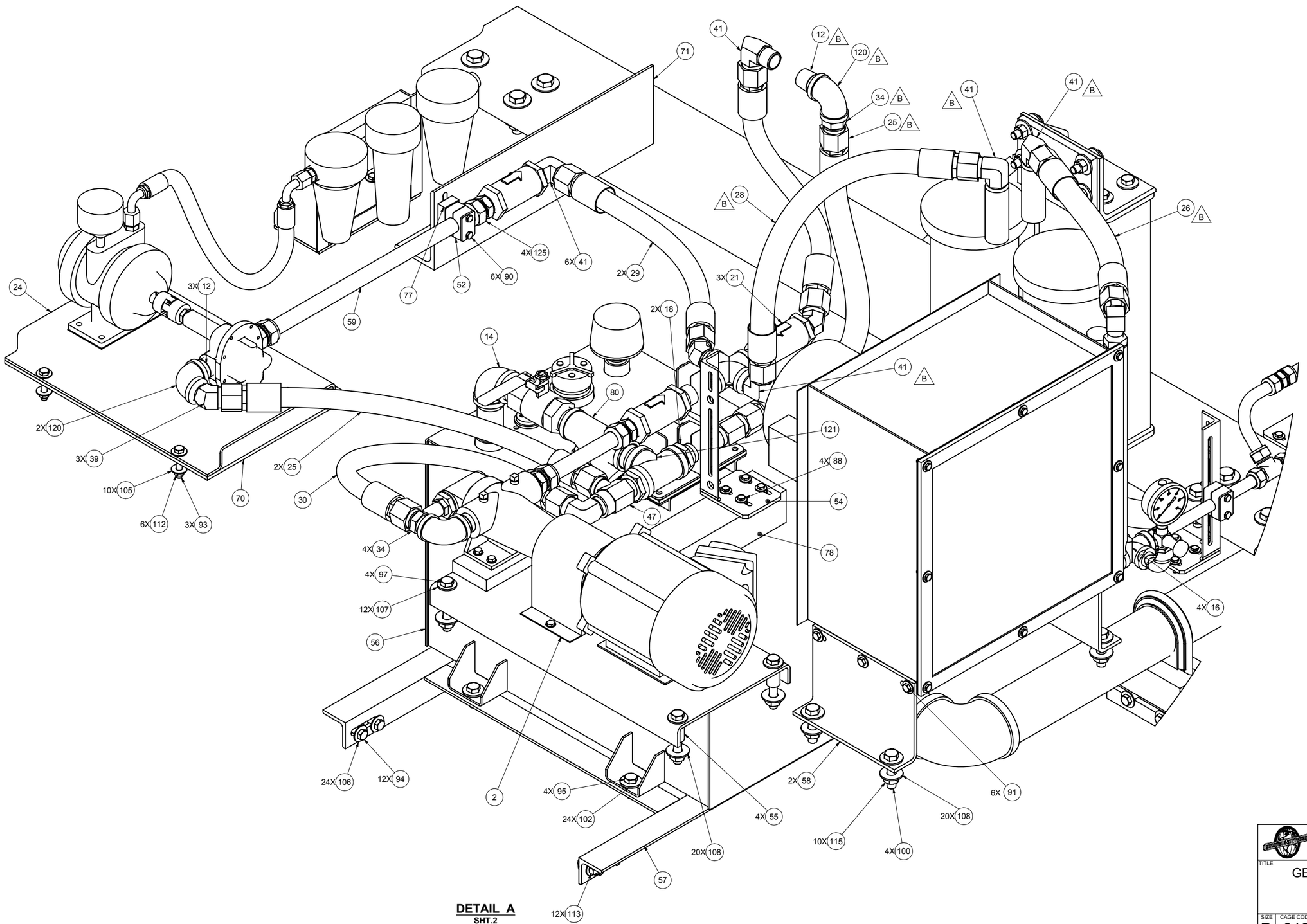

STEWART & STEVENSON LLC

TITLE
GENERATOR BEARING LUBE OIL SYSTEM, INSTALLATION, DM3580EG7C-T2

SIZE	CAGE CODE	DWG NO	REV
D	81381	27101001	B

SCALE: NTS | FILE: 27101001.idw | SHEET 5 OF 7

RELEASED

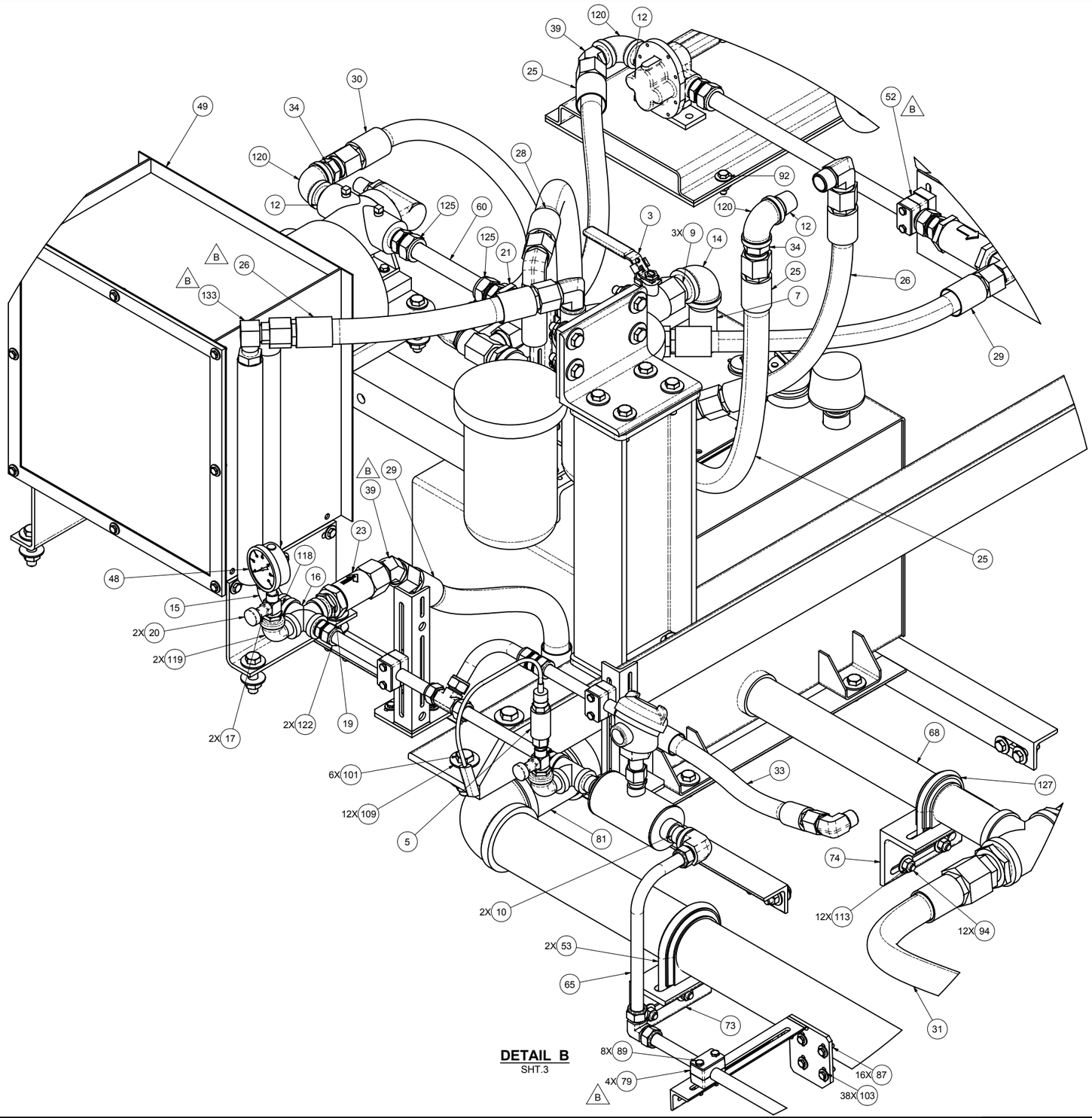

DETAIL B
SHT.3

STEWART & STEVENSON LLC

TITLE
GENERATOR BEARING LUBE OIL SYSTEM, INSTALLATION, DM3580EG7C-T2

SIZE	CAGE CODE	DWG NO	REV
D	81381	27101001	B

SCALE: NTS | FILE: 27101001.idw | SHEET 6 OF 7

RELEASED

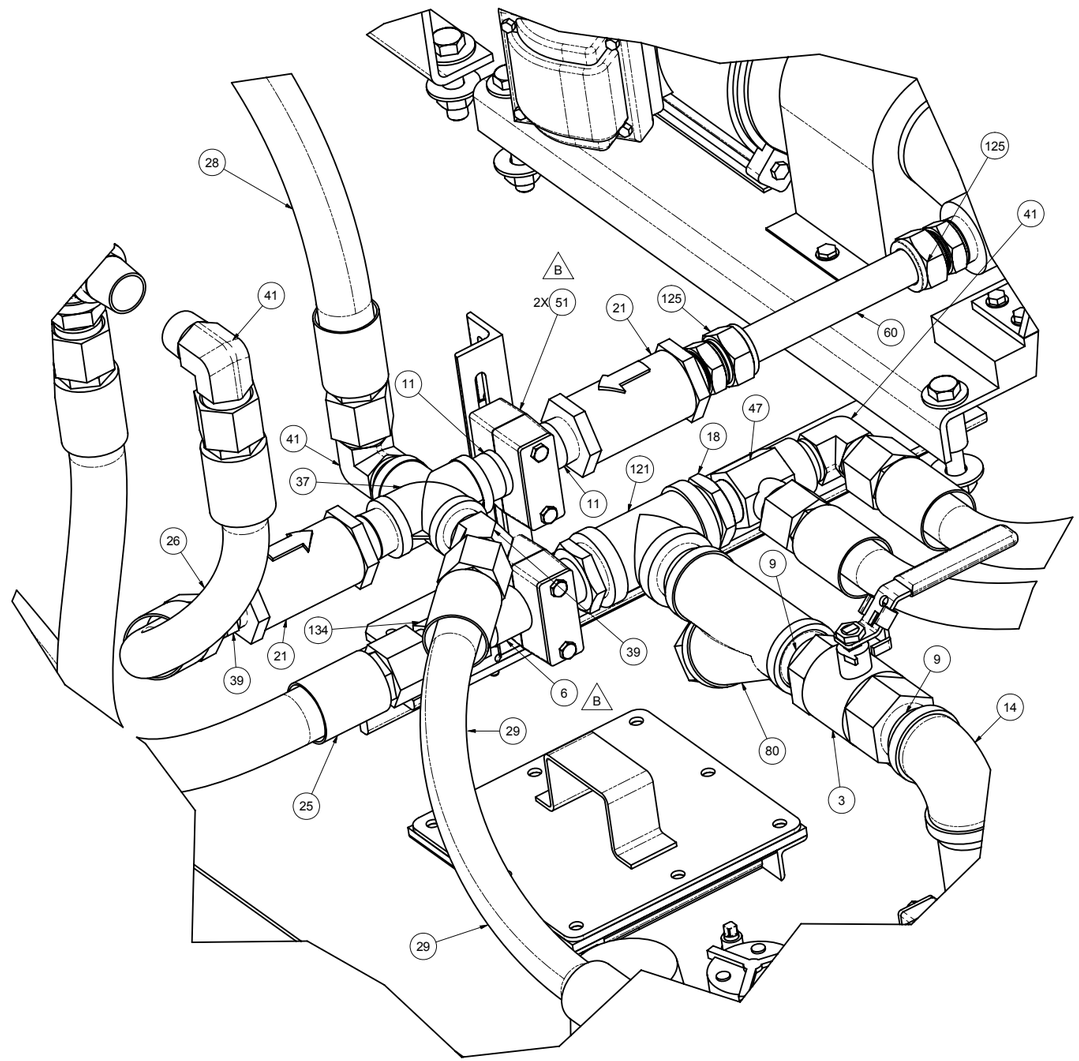

DETAIL E
SHT. 4

STEWART & STEVENSON LLC

TITLE
GENERATOR BEARING LUBE OIL SYSTEM, INSTALLATION, DM3580EG7C-T2

SIZE	CAGE CODE	DWG NO	REV
D	81381	27101001	B

SCALE: NTS | FILE: 27101001.idw | SHEET 7 OF 7

RELEASED

REVISION HISTORY

REV	DESCRIPTION	DESIGNER	CHECKED BY	ENGINEER	APP. DATE
-	INITIAL RELEASE PER ECO-001140	I. BOERU	M. AALY	M. AALY	4/16/2009
A	UPDATED PER ECO-001281	I. BOERU	M. AALY	M. AALY	5/28/2009
B	UPDATED PER ECO-001325	I. BOERU	M. AALY	M. AALY	6/03/2009
C	UPDATED PER ECO-001802	I. BOERU	B. RAMIREZ	M. AALY	9/8/2009

NOTES:

1. APPLICABLE STANDARDS/SPECIFICATIONS:
   A. ASME Y 14.5M-1994

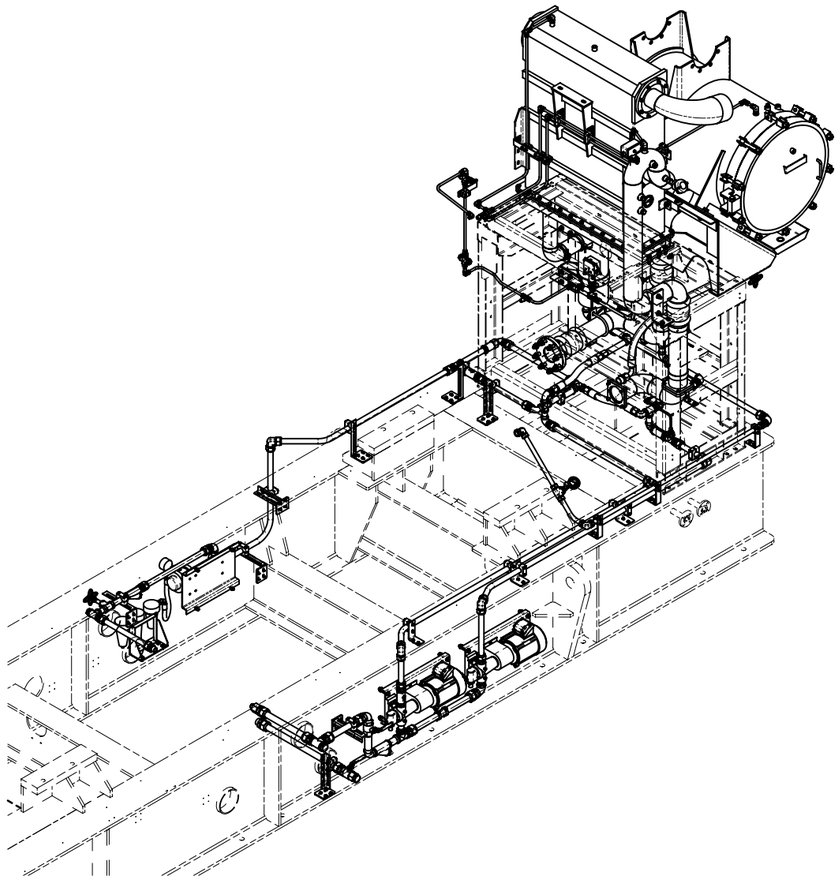

BOM continued next page

FIND	QTY	PART NUMBER	TITLE
65	1	27101327	TUBE, RND, SS, 1 1/4" OD .095 WALL X 16.81" LONG
64	2	27101326	TUBE, RND, SS, 1 1/4" OD .095 WALL X 22.69" LONG
63	1	27101324	TUBE, RND, SS, 1 1/4" OD .095 WALL X 55.00" LONG
62	1	27101322	TUBE, RND, SS, 1 1/4" OD .095 WALL X 80.06" LONG
61	1	27101321	TUBE, RND, SS, 1 1/4" OD .095 WALL X 92.50" LONG
60	1	27101320	TUBE, RND, SS, 1 1/4" OD .095 WALL X 51.81" LONG
59	2	27101319	TUBE, RND, SS, 1 1/4" OD .095 WALL X 10.50" LONG
C 58	1	27101318	TUBE, RND, SS, 1 1/4" OD .095 WALL X 14.50" LONG
57	2	21300007	NIPPLE,PIPE,TBE,SS304,SCH40,1"MNPT X 8"
56	1	22602123	ADAPTER,90°,#16MJICX1"MNPT, SS

PARTS LIST

FIND	QTY	PART NUMBER	TITLE
55	1	22602031	ADAPTER,STR,#16MJICX1"FNPT, SS
54	1	21300055	NIPPLE,PIPE,TBE,SS304,SCH40,1"MNPT X 16"
C 53	1	22600183	SS SWAGELOK TUBE FITTING, FEMALE BRANCH TEE, 1 IN. TUBE OD X 1 IN. TUBE OD X 1 IN. FEMALE NPT
52	1	21300041	NIPPLE,PIPE,TBE,SS304,SCH40,1"MNPT X 3-1/2"
51	1	21300059	NIPPLE,PIPE,TBE,SS304,SCH40,1-1/4"MNPT X 4"
50	7	21300097	NIPPLE,PIPE,TBE,SS304,SCH40,1"MNPT X 3"
49	3	21300140	NIPPLE,PIPE,TBE,SS304,SCH40,1"MNPT X 5-1/2"
48	2	21300020	NIPPLE,PIPE,TBE,SS304,SCH40,1"MNPT X 2-1/2"
47	2	213149	NIPPLE,PIPE,TBE,SS304,SCH40,1"MNPT X 6"
46	1	21300093	NIPPLE,PIPE,TBE,SS304,SCH40,1-1/4"MNPT X 6"
45	1	21700005	CROSS,PIPE,3000#, 1"NPTF, SS
44	4	SF0100594	ELBOW,PIPE,STREET,SS304,150#,90DEG,1"NPT
43	1	20060354	VALVE, CHECK/RELIEF, 1"NPT, 30 PSI
42	1	24400005	VALVE, CHECK/RELIEF, 1"NPT, 75 PSI
C 41	2	22000007	VALVE,CHECK,1"NPTF
40	1	20060358	STRAINER,Y,1",BRASS,150#, 1/64MESH SS SCREEN
39	1	SS-1610-1-16	SS SWAGELOK TUBE FITTING, MALE CONNECTOR, 1" Tube OD X 1" MALE NPT
38	5	77905	PLUG,PIPE,HEXHEAD,SS304,3000#,1"NPT
C 37	6	21500014	TEE,PIPE,THREADED,SS304,150#,1"NPT
36	5	22600126	SS SWAGELOK TUBE FITTING, UNION ELBOW, 1 1/4 IN. TUBE OD
C 35	18	22600206	SS SWAGELOK TUBE FITTING, MALE CONNECTOR, 1 1/4 IN. TUBE OD X 1 IN. MALE NPT
34	2	77906	PLUG,PIPE,HEXHEAD,SS304,3000#,1-1/4"NPT
33	1	21600021	ELBOW,PIPE,THREADED,SS304,90DEG,150#,1-1/4"NPT
C 32	1	22602275	ADAPTER, STRAIGHT EXPANDER, 1" MNPT X 1 1/4" FNPT, SS
31	2	12903834	BUSHING,PIPE,SS304,3000#,1-1/4"NPTM X 1"NPTF
30	2	SF0125T	TEE,PIPE,THREADED,SS304,150#,1-1/4"NPT
C 29	2	21600027	ELBOW,PIPE,STREET,SS304,150#,90DEG,1-1/4"NPT
28	8	22600205	SS SWAGELOK TUBE FITTING, MALE TUBE ADAPTER, 1 1/2 IN. TUBE OD X 1 1/4 IN. MALE NPT
C 27	2	SS-1610-9	SS SWAGELOK TUBE FITTING, UNION ELBOW, 1" TUBE OD
26	2	26106911	CLAMP, HALF, SOAKBACK FILTER
25	2	2002G0253	CLAMP,MTG,TURBO FILTER - MATERIAL: STEEL,PLATE,1/4",
C 24	2	20060355	VALVE,BALL,1-1/4" NPT
23	8	26102559	WELDMENT, SUPPORT, PIPE, UNIVERSAL, DM3865E GENERATOR
22	1	27100850	4" PIPING WELDMENT
21	1	27100851	4" PIPING WELDMENT
20	1	27100849	3" PIPING WELDMENT
19	5	213146	NIPPLE,PIPE,TBE,SS304,SCH40,1"MNPT X 2"
18	4	20060357	VALVE, GATE, 1", BRASS, 150
17	3	22600179	ADAPTER,STR,#16MJICX1"MNPT, SS
16	10	SF0100L94	ELBOW,PIPE,THREADED,SS304,90DEG,150#,1"NPT
15	1	21300029	NIPPLE,PIPE,TBE,SS304,SCH40,1"MNPT X 9"
14	1	26102507	TUBE ADAPTER PLATE, LUBE OIL COOLER
13	1	22602193	ADAPTER,STR,#16MJICX1-1/2"MNPT, SS
12	3	20060362	COUPLING, PIPE, FLEX, 4"
11	1	26110180	PIPING, WELDMENT, FLEXIBLE, 4" PIPE ENDS, 21.50" LONG
10	1	26109662	4" PIPING, WELDMENT
9	1	20060326	COUPLING,PIPE,FLEX,3"
8	1	26109668	PIPING, WELDMENT, FLEXIBLE, 4' PIPE ENDS, 18.88" LONG
7	1	8379120	FILTER ASSEMBLY SOAK BACK LUBE OIL
6	8	26104760	SPACER, LUBE OIL PUMP MOUNTING, DM3865E GENERATOR
5	2	20060351	PUMP,LUBE OIL
4	1	22100148	AIR DRIVEN OIL PUMP ASSEMBLY
3	1	20060040	LUBE OIL FILTER-FARR
2	1	26108497	MOUNT, WELDMENT, LUBE OIL FILTER
1	1	26106435	MODIFICATION, LUBE OIL COOLER, EMD ME 20-710G7

PARTS LIST

UNLESS OTHERWISE SPECIFIED
ALL DIMENSIONS ARE IN INCHES.
DIMS IN [] ARE IN mm, AND
ARE FOR REFERENCE ONLY.

TOLERANCES UNLESS NOTED OTHERWISE
.X = ± .1
.XX = ± .06
.XXX = ± .005

ANGLES = ± .5°

DRAWN	I. BOERU	4/16/2009
CHECKED	M. AALY	4/16/2009
PROJ ENG	M. AALY	4/16/2009

THIRD ANGLE PROJECTION

STEWART & STEVENSON LLC

TITLE
LUBE OIL SYSTEM, INSTALATION, DM3580EG7C-T2

SIZE	CAGE CODE	DWG NO	REV
D	81381	27101007	C

SCALE: NTS FILE: 27101007.idw SHEET 1 OF 10

FIND	QTY	PART NUMBER	TITLE
201	2	21700002	CROSS, PIPE, 150#, 3/4" NPT, SS
200	1	SS-810-8-6	SS SWAGELOK TUBE FITTING, FEMALE ELBOW, 1/2 IN. TUBE OD X 3/8 IN. FEMALE NPT
199	1	27103337	TUBE, RND, SS, 1" OD, .065" WALL X 15.81" LONG
198	1	21900024	BUSHING,PIPE,SS,150#,1"NPTM X 1/2"NPTF
197	1	27103552	TUBE, RND, 3/8" OD, .035" WALL 20.75" LONG, SS
196	4	24600393	Clamp Assy, Tube, SS, 1"
195	3	24600379	Clamp Assy, Pipe, SS, 1"
194	1	24600371	Clamp Assy, Tube, SS, 3/4"
193	5	24600389	Clamp Assy, Tube, SS, 1/2"
192	11	24600374	Clamp Assy, Tube, SS, 1-1/4"
191	2	24600375	Clamp Assy, Tube, SS, 1-1/2"
190	1	21100049	COUPLING, TUBE, FLEXMASTER, 1.50"
189	2	SS-600-1-4	SS SWAGELOK TUBE FITTING, MALE CONNECTOR, 3/8 IN. TUBE OD X 1/4 MALE NPT
188	1	22000265	VALVE, CHECK, 1", NPTF, BRASS, 20PSI CRACK
187	4	AEW26X32R000WB0A91	WASHER, PLAIN, 5/16 - REGULAR - TYPE B
186	4	AES01C312A00WA6A91	CAP SCREW, HEX HEAD, 5/16-18 UNC X 1 LG.
151	1	27101780	TUBE, RND, 1/2" OD,SS, .035 WALL, 13.63" LG.
185	1	59-006-01	STRAINER, "Y" TYPE, 1-1/4" NPTF, BRASS, 20 MESH SCREEN
184	1	26102508	GASKET, TUBE ADAPTER PLATE
183	1	27101601	BRACKET, ANGLE, 2" X 1 1/2" X 1/4" X 44.00" LONG
182	5	AES01C375A25WA6A91	CAP SCREW, HEX HEAD, 3/8-16 UNC X 1.25 LG.
181	2	AES01C250B50WA6A91	CAP SCREW, HEX HEAD, 1/4-20 UNC X 2.5 LG.
180	20	AES01C250B25WA6A91	CAP SCREW, HEX HEAD, 1/4-20 UNC X 2.25 LG.
179	1	27101597	BRACKET, 3/4" TUBING SUPPORT
178	1	27101594	BRACKET, SUPPORT
177	2	27101592	BRACKET, SUPPORT
176	1	27101587	BRACKET, SUPPORT
175	1	27101586	BRACKET, 1/2" TUBING SUPPORT
174	1	27101572	TUBE, RND, SS, 1/2" OD, .035" WALL X 7.59" LONG
173	1	27101571	TUBE, RND, SS, 1/2" OD, .035" WALL X 5.50" LONG
172	1	27101569	TUBE, RND, SS, 1/2" OD, .035" WALL X 65.94" LONG
171	1	27101568	TUBE, RND, SS, 1/2" OD, .035" WALL X 39.50" LONG
170	1	27101567	TUBE, RND, SS, 1/2" OD, .035" WALL X 52.19" LONG
169	1	27101566	TUBE, RND, SS, 1/2" OD, .035" WALL X 38.91" LONG
168	1	27101565	TUBE, RND, SS, 1/2" OD, .035" WALL X 38.44" LONG
167	2	24600223	SWAGELOK TUBE SUPPORT, DOUBLE, 1/2
166	1	27101564	TUBE, RND, SS, 1/2" OD, .035" WALL X 21.12" LONG
165	1	27101570	TUBE, RND, SS, 1/2" OD, .035" WALL X 19.50" LONG
164	1	22400444	HOSE, ASSEMBLY, FC234-#16FJX-#16FJX90-41"
163	1	SS-810-2-6	SS SWAGELOK TUBE FITTING, MALE ELBOW, 1/2 IN. TUBE OD X 3/8 IN. MALE NPT
162	1	22600166	ELBOW,90DEG,1/2"TUBEX3/4"NPT, MALE,SS,SWAGELOK
161	1	9544842	SWITCH, TEMPERATURE, LUBE OIL LO
160	1	SS-12-RB-6	BUSHING,3/4"NPTM X 3/8"NPTF - PIPE FITTING,316SST,SWAGELOK
159	1	8242814	CHOKE,RESTRICTION ORIFICE,1/16
158	1	26109092	TUBE, RND, SS, 1/2" OD, .035" WALL X 20.5" LONG
157	2	22600167	ADAPTER,1/2"TUBE X 3/4" NPT, MALE,SS,SWAGELOK
156	2	26110302	TUBE, RND, SS, 1/2" OD, .035" WALL X 2.75" LONG
155	1	SS-8-ST	STAINLESS STEEL PIPE FITTING, STREET TEE, 1/2 IN. FEMALE NPT X 1/2 IN. MALE NPT X 1/2 IN. FEMALE NPT
154	1	SS-810-3-8TMT	SS SWAGELOK TUBE FITTING, MALE RUN TEE, 1/2 IN. TUBE OD X 1/2 IN. MALE NPT X 1/2 IN. TUBE OD
153	6	SS-810-9	SS SWAGELOK TUBE FITTING, UNION ELBOW, 1/2 IN. TUBE OD
152	2	SS-810-3-8TTF	SS SWAGELOK TUBE FITTING, FEMALE RUN TEE, 1/2 IN. TUBE OD X 3/8 IN. FEMALE NPT X 1/2 IN. TUBE OD
150	1	77903	PLUG,PIPE,HEXHEAD,SS304,3000#,1/2"NPT
149	2	SS-810-2-8	SS SWAGELOK TUBE FITTING, MALE ELBOW, 1/2 IN. TUBE OD X 1/2 IN. MALE NPT
148	1	21300102	NIPPLE,PIPE,TBE,SS304,SCH40,1/2"MNPT X 4-1/2"
147	1	40019122	VALVE,SWING CHECK,1/2",BRONZE
146	1	26107142	TUBE, RND, 3/4" OD, .083 WALL, 31.50" LG., SS
145	1	26101397	FLANGE, 3/4" NPT, LUBE OIL
144	1	SS-1210-1-12	SS SWAGELOK TUBE FITTING, MALE CONNECTOR, 3/4" TUBE OD X 3/4" MALE NPT
143	1	SS-1210-1-8	SS SWAGELOK TUBE FITTING, MALE CONNECTOR, 3/4 IN. TUBE OD X 1/2 IN. MALE NPT
142	1	20060376	GASKET, LUBE OIL COOLER OUT
141	3	SS-810-8-8	SS SWAGELOK TUBE FITTING, FEMALE ELBOW, 1/2 IN. TUBE OD X 1/2 IN. FEMALE NPT
140	3	8290236	CHOKE,RESTRICTION ORIFICE,1/8"
139	2	27101496	BRACKET, 1 1/4 INCH TUBE SUPPORT
138	13	BM36782	NUT,HEX,LOCK, 3/8-16 UNC
137	8	AES01C375A50WA6A91	CAP SCREW, HEX HEAD, 3/8-16 UNC X 1.5 LG.
136	26	AEW24X37N000WB0A91	WASHER, PLAIN, 3/8 - NARROW - TYPE A

PARTS LIST

FIND	QTY	PART NUMBER	TITLE
135	4	AES01C750B00WA6A91	CAP SCREW, HEX HEAD, 3/4-10 UNC X 2 LG.
134	8	AEW24X75N000WB0A91	WASHER, PLAIN, 3/4 - NARROW - TYPE A
133	4	BM36787	NUT,HEX,LOCK, 3/4-10 UNC
132	10	AES01C500B00WA6A91	CAP SCREW, HEX HEAD, 1/2-13 UNC X 2 LG.
131	1	22400639	HOSE, ASSEMBLY, FC234-#16JX-#16JX-24.00" LONG
130	1	22400638	HOSE, ASSEMBLY, FC234-#16JX-#16JX-16.50" LONG
129	54	AES01C250750WA6A91	CAP SCREW, HEX HEAD, 1/4-20 UNC X 0.75 LG.
128	52	BM36780	NUT,HEX,LOCK, 1/4-20 UNC
127	107	AEW24X25N000WB0A91	WASHER, PLAIN, 1/4 - NARROW - TYPE A
126	30	AES01C250B87WA6A91	CAP SCREW, HEX HEAD, 1/4-20 UNC X 3 LG.
125	20	AES01C500A50WA6A91	CAP SCREW, HEX HEAD, 1/2-13 UNC X 1.5 LG.
124	12	AES01C500A75WA6A91	CAP SCREW, HEX HEAD, 1/2-13 UNC X 1.75 LG.
123	4	AES01F500A50WA6A91	CAP SCREW, HEX HEAD, 1/2-20 UNF X 1.5 LG.
122	1	20060378	GASKET, LUBE OIL COOLER FLANGE
121	1	209102	GASKET,FLANGE,FF,150#,4"
120	8	AES01C625C25WA6A91	CAP SCREW, HEX HEAD, 5/8-11 UNC X 3.25 LG.
119	8	BM36786	NUT,HEX,LOCK, 5/8-11 UNC
118	16	AEW24X62N000WB0A91	WASHER, PLAIN, 5/8 - NARROW - TYPE A
117	56	BM36784	NUT,HEX,LOCK, 1/2-13 UNC
116	8	AES01C500B87WA6A91	CAP SCREW, HEX HEAD, 1/2-13 UNC X 3 LG.
115	110	AEW24X50N000WB0A91	WASHER, PLAIN, 1/2 - NARROW - TYPE A
114	2	20060375	GASKET, SCAVENGE ELBOW OUTLET
113	1	20060377	GASKET, LUBE OIL COOLER FLANGE
112	12	AES01C562A50WA6A91	CAP SCREW, HEX HEAD, 9/16-12 UNC X 1.5 LG.
111	11	AEW24X56N000WB0A91	WASHER, PLAIN, 9/16 - NARROW - TYPE A
110	1	27101547	TUBE, RND, SS, .375" OD, .035" WALL, X 8.75" LONG
109	1	27101546	TUBE, RND, SS, .375" OD, .035" WALL, X 9.63" LONG
108	2	27101545	TUBE, RND, SS, .375" OD, .035" WALL, X 7.06" LONG
107	3	SS-600-9	UNION ELBOW, 3/8"TUBE TO 3/8"
106	2	27101543	TUBE, RND, SS, .375" OD, .035" WALL, X 12.19" LONG
105	2	SF0008T4	TEE,PIPE,THREADED,SS304,150#,1/2"NPT
104	1	26100878	PIGTAIL, TRANSMITTER/SWITCH
103	5	SS-600-1-8	SS SWAGELOK TUBE FITTING, MALE CONNECTOR, 3/8 IN. TUBE OD X 1/2 IN. MALE NPT
102	3	21300057	NIPPLE,PIPE,TBE,SS304,SCH40,1/2"MNPT X 1-1/2"
101	1	22900046	TRANSMITTER, DIFFERENTIAL PRESS
100	1	SS-600-1-6	SS SWAGELOK TUBE FITTING, MALE CONNECTOR, 3/8 IN. TUBE OD X 3/8 IN. MALE NPT
99	1	21900032	BUSHING,PIPE,SS,6000#,1"NPTM X 3/8"NPTF
98	2	21900019	BUSHING,PIPE,SS,6000#,1/2"NPTM X 1/4"NPTF
97	1	20060400	TRANSMITTER, SENSOR, 4-20MA, 0-400 DEG. F.
96	2	H117-171	SWITCH,PRESSURE,ADJ,0-30PSI
95	1	26107168	GASKET, 1" SAE FLANGE
94	1	87932	PLUG,PIPE,HEXHEAD,STL,STD,3/4"NPT
93	1	20060345	GAUGE, TEMP.,50 °-300°, IN-LINE
92	1	20060346	THERMOWELL,GAUGE,TEMP, 2-3/4" LONG
91	5	9327526	SIGHT GLASS, 3/4" MNPT
90	1	2000G0539	GAUGE,PRESSURE,0-100 PSI RANGE
89	3	22000003	VALVE,NEEDLE,1/4",BRASS,MXF,3000 PSI
88	1	21900028	BUSHING,PIPE,SS,6000#,1"NPTM X 1/4"NPTF
87	1	27101427	BRACKET, SUPPORT, 4" PIPE
86	1	26110008	4" PIPING, WELDMENT
85	4	27101422	BRACKET, 1 1/4 INCH TUBE SUPPORT
84	1	27101410	BRACKET, 1 1/4 INCH TUBE SUPPORT
83	2	27101409	BRACKET, 1 1/4 INCH TUBE SUPPORT
82	1	27101398	PIPE 4", WELDMENT
81	1	27101385	BRACKET, SUPPORT, 3" PIPE
80	1	BM38776	UBOLT, 3" PIPE, 1/2-13 UNC X 3-1/2" ID X 5" LG
79	1	27101383	BRACKET SUPPORT, 4" PIPE
78	1	27101380	BRACKET, SUPPORT, 4" PIPE
77	3	BM38778	UBOLT, 4" PIPE, 1/2-13 UNC X 4-1/2" ID X 6" LG
76	2	27101370	BRACKET, SUPPORT, SOAKBACK FILTER
75	1	27101340	TUBE, RND, SS, 1 1/2" OD .065 WALL X 27.25" LONG
74	1	27101339	TUBE, RND, SS, 1 1/4" OD .065 WALL
73	1	27101338	TUBE, RND, SS, 1 1/2" OD .065 WALL X 16.91" LONG
72	1	27101337	TUBE, RND, SS, 1 1/2" OD .065 WALL X 12.25" LONG
71	2	27101335	TUBE, RND, SS, 1 1/2" OD .065 WALL, 11.00" LONG
70	1	27101330	TUBE, RND, SS, 1" OD, .065" WALL X 10.25" LONG
69	1	27101329	TUBE, RND, SS, 1" OD, .065" WALL X 60.00" LONG
68	1	27101323	TUBE, RND, SS, 1 1/4" OD .095 WALL X 45.38" LONG
67	1	27101325	TUBE, RND, SS, 1 1/4" OD .095 WALL X 15.50" LONG
66	1	27101328	TUBE, RND, SS, 1 1/4" OD .095 WALL X 34.38" LONG

PARTS LIST

STEWART & STEVENSON LLC

TITLE
LUBE OIL SYSTEM, INSTALATION, DM3580EG7C-T2

SIZE	CAGE CODE	DWG NO	REV
D	81381	27101007	C

SCALE: NTS | FILE: 27101007.idw | SHEET 2 OF 10

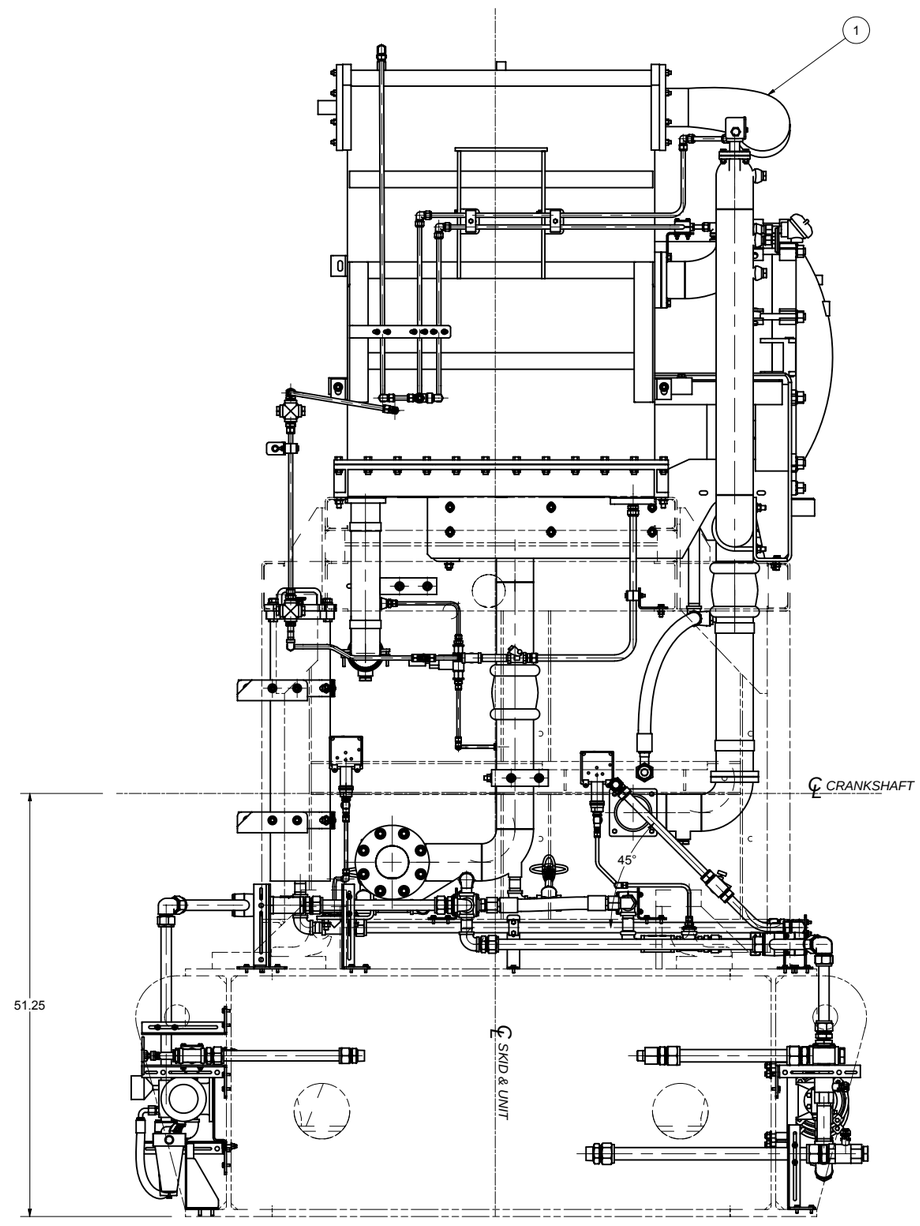

STEWART & STEVENSON LLC

TITLE
LUBE OIL SYSTEM, INSTALATION,
DM3580EG7C-T2

SIZE	CAGE CODE	DWG NO	REV
D	81381	27101007	C

SCALE: NTS | FILE: 27101007.idw | SHEET 3 OF 10

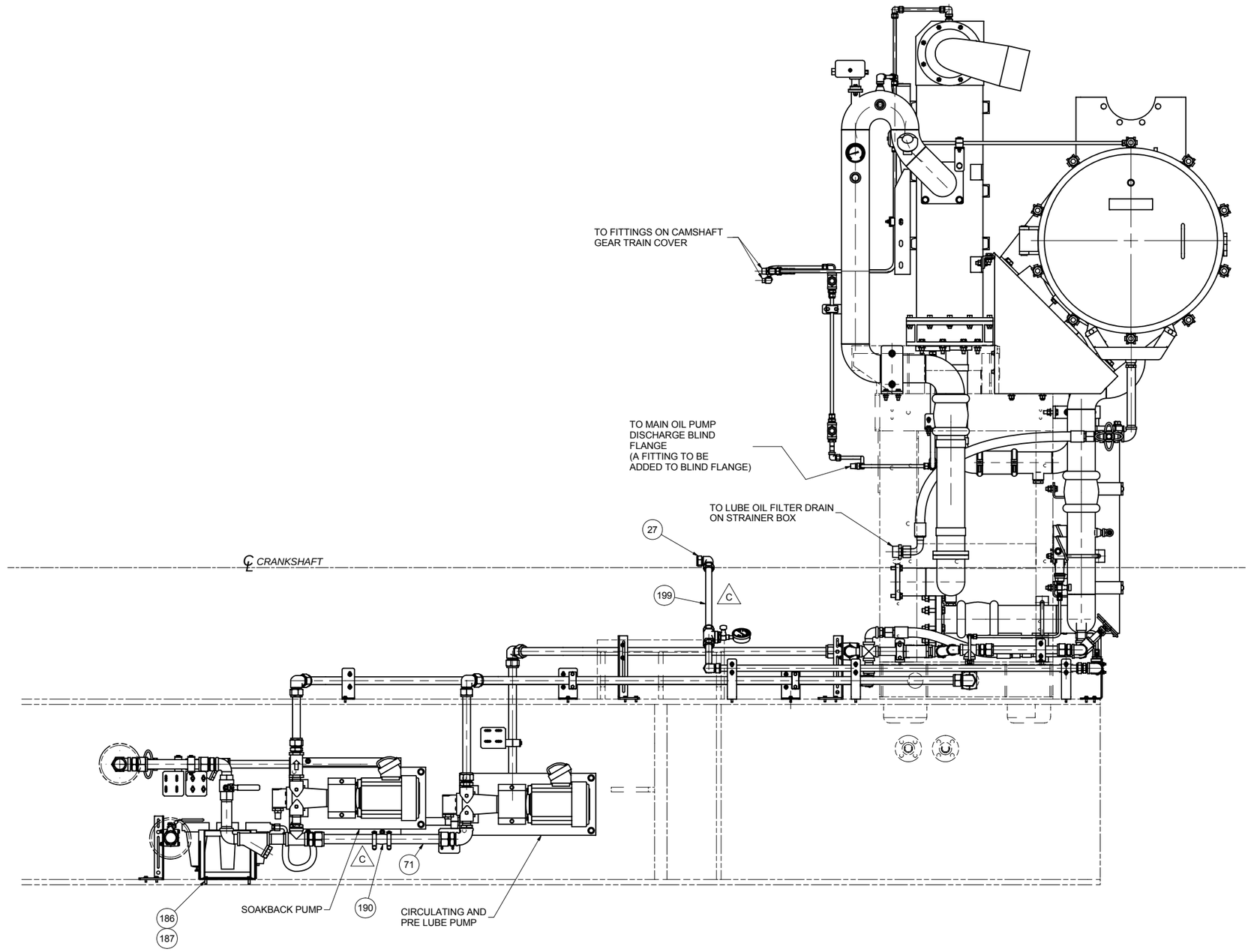

STEWART & STEVENSON LLC

TITLE
LUBE OIL SYSTEM, INSTALATION,
DM3580EG7C-T2

SIZE	CAGE CODE	DWG NO	REV
D	81381	27101007	C

SCALE: NTS | FILE: 27101007.idw | SHEET 4 OF 10

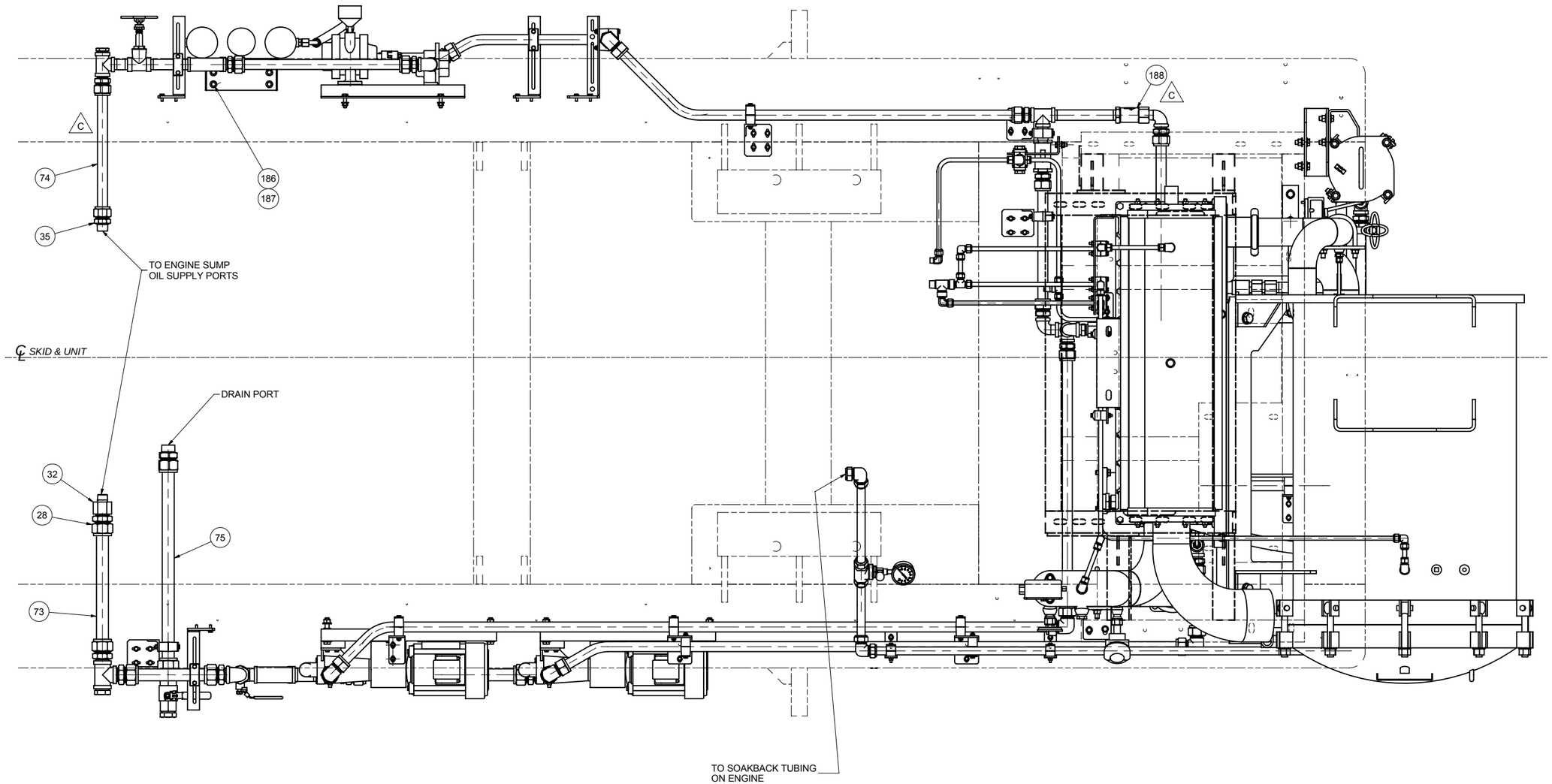

STEWART & STEVENSON LLC

TITLE

LUBE OIL SYSTEM, INSTALATION,
DM3580EG7C-T2

SIZE	CAGE CODE	DWG NO	REV
D	81381	27101007	C

SCALE: NTS FILE: 27101007.idw SHEET 5 OF 10

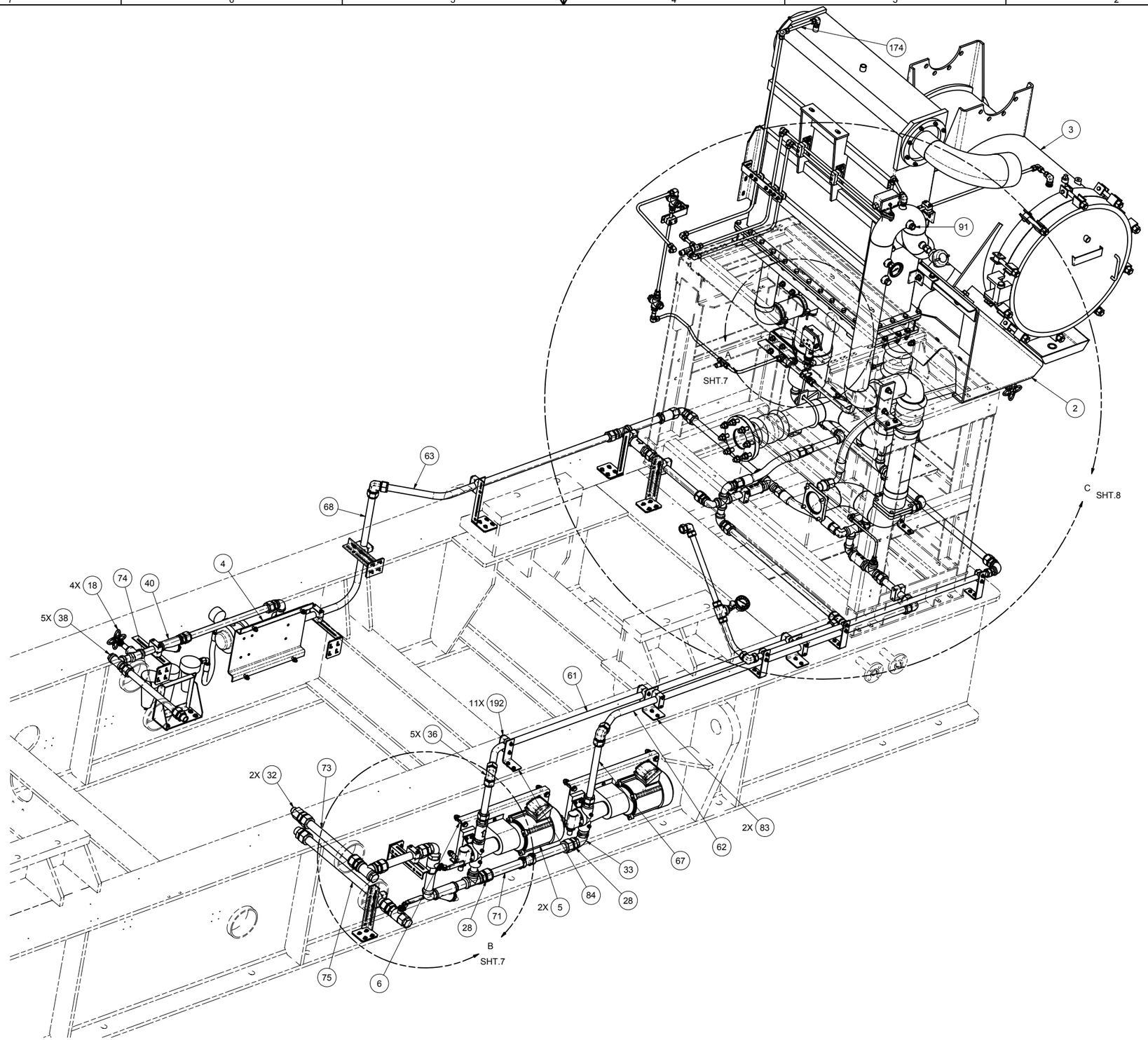

STEWART & STEVENSON LLC

TITLE

LUBE OIL SYSTEM, INSTALATION, DM3580EG7C-T2

SIZE	CAGE CODE	DWG NO	REV
D	81381	27101007	C

SCALE: NTS | FILE: 27101007.idw | SHEET 6 OF 10

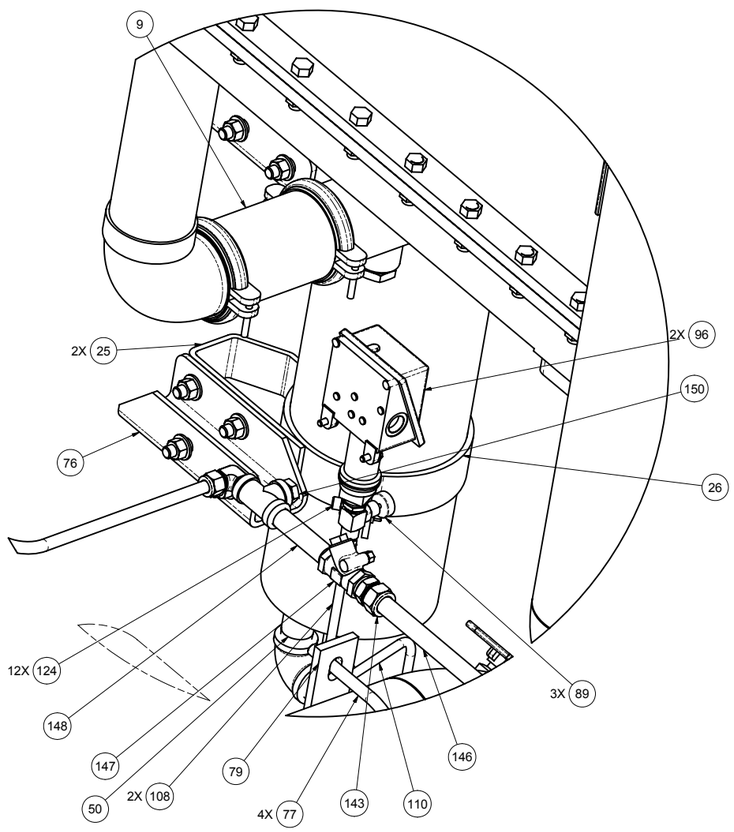

DETAIL A
SHT.6

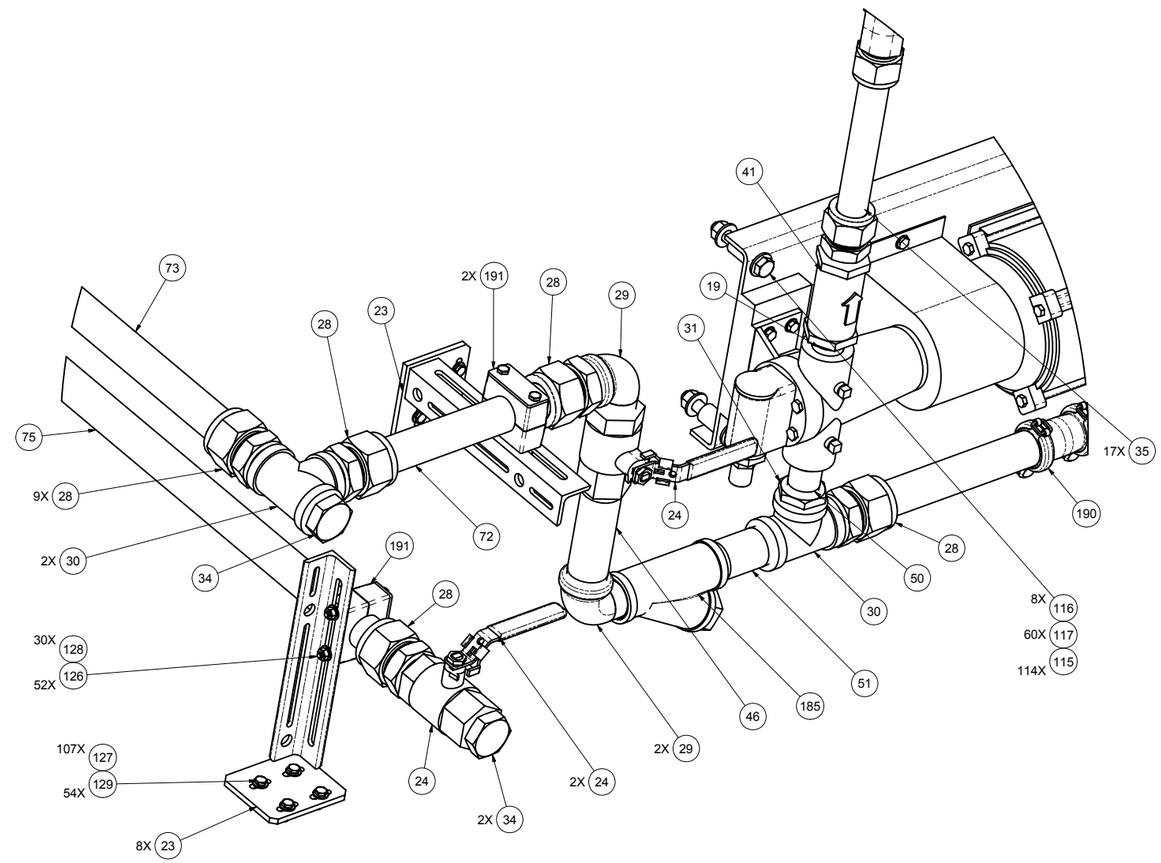

DETAIL B
SHT.6

STEWART & STEVENSON LLC

TITLE
LUBE OIL SYSTEM, INSTALATION, DM3580EG7C-T2

SIZE	CAGE CODE	DWG NO	REV
D	81381	27101007	C

SCALE: NTS | FILE: 27101007.idw | SHEET 7 OF 10

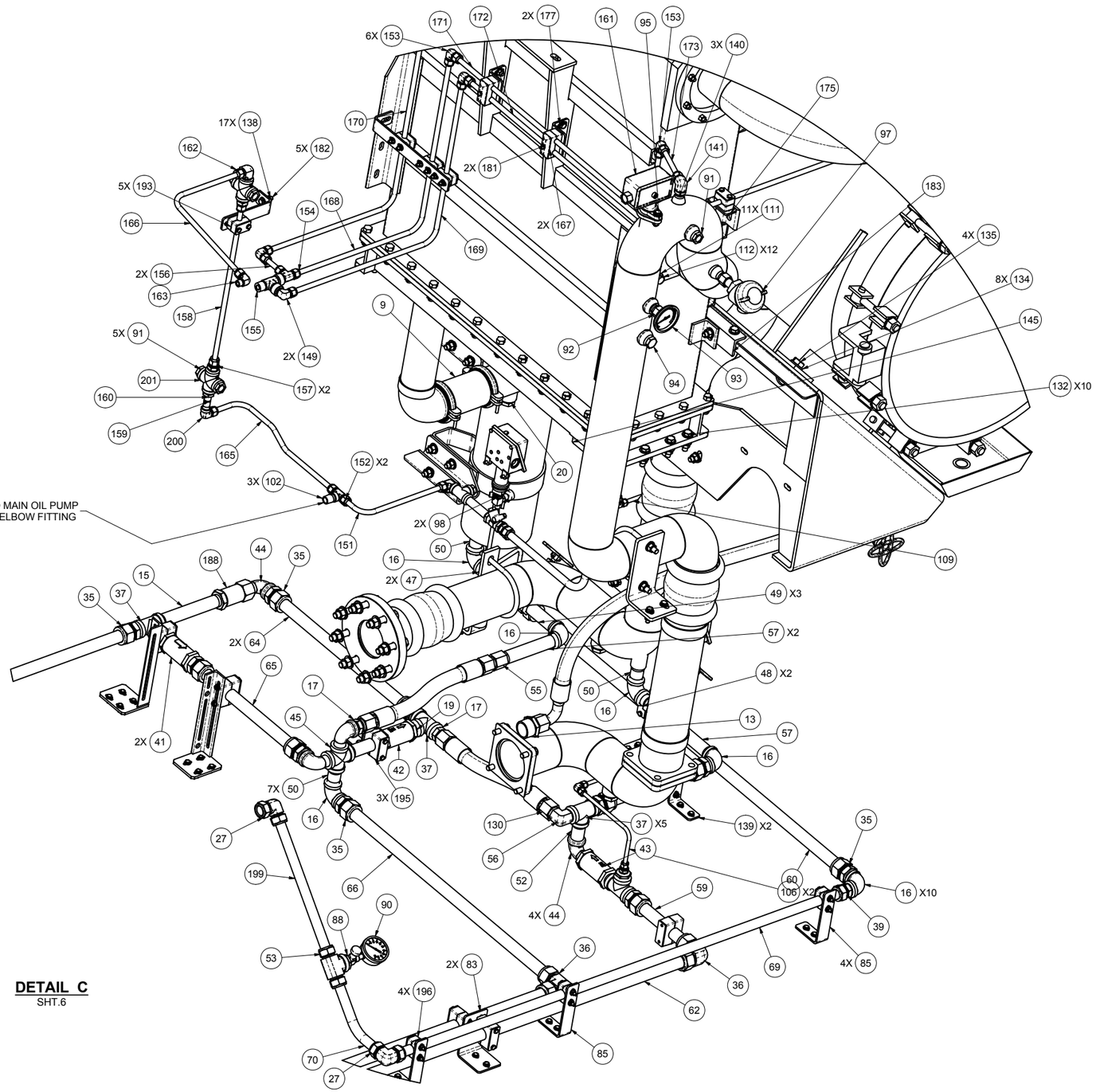

DETAIL C
SHT.6

STEWART & STEVENSON LLC

TITLE
LUBE OIL SYSTEM, INSTALATION,
DM3580EG7C-T2

SIZE	CAGE CODE	DWG NO	REV
D	81381	27101007	C

SCALE: NTS | FILE: 27101007.idw | SHEET 8 OF 10

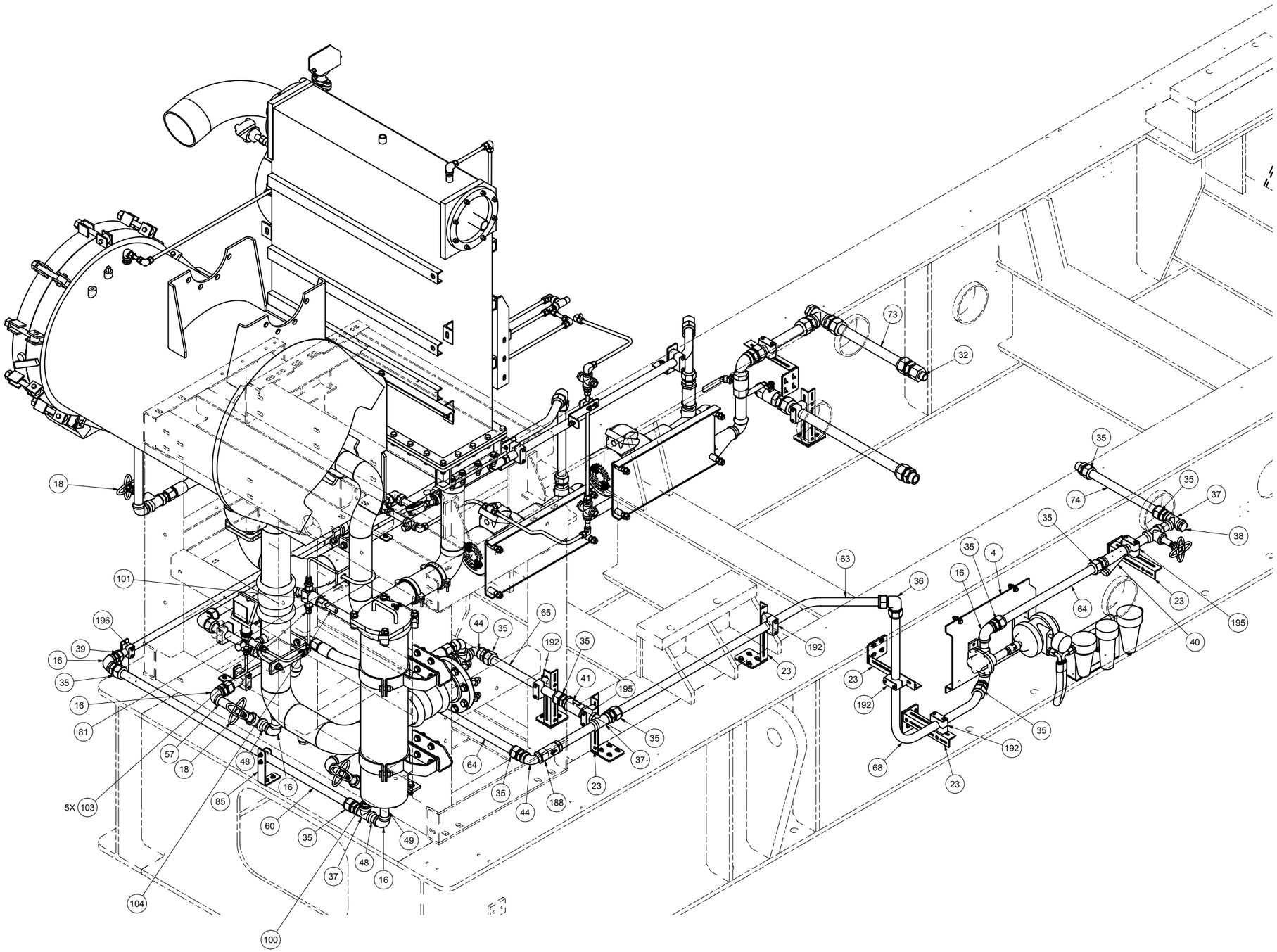

STEWART & STEVENSON LLC

TITLE

LUBE OIL SYSTEM, INSTALATION, DM3580EG7C-T2

SIZE	CAGE CODE	DWG NO	REV
D	81381	27101007	C

SCALE: NTS FILE: 27101007.idw SHEET 9 OF 10

C:\Vault Work\Product Data\Generators\Projects\SO 6098943 Noble Drilling Segerius (60 Hz)\26110754 Top Level\26110760 ASSEMBLY, LUBE OIL SYSTEM\27101007 - LUBE OIL SYSTEM, INSTALLATION, DM3580EG7C-T2\27101007.idw

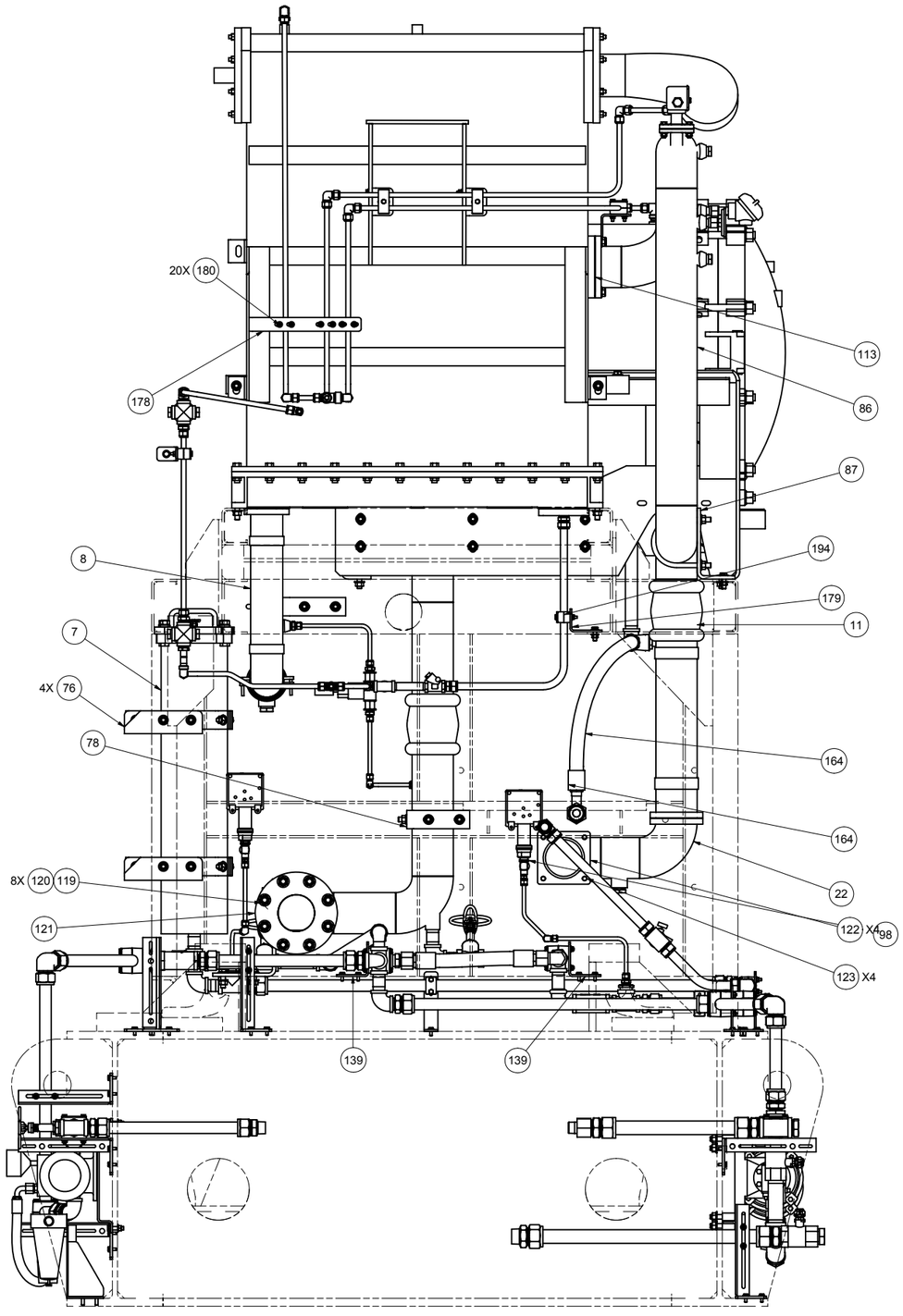

FRONT VIEW

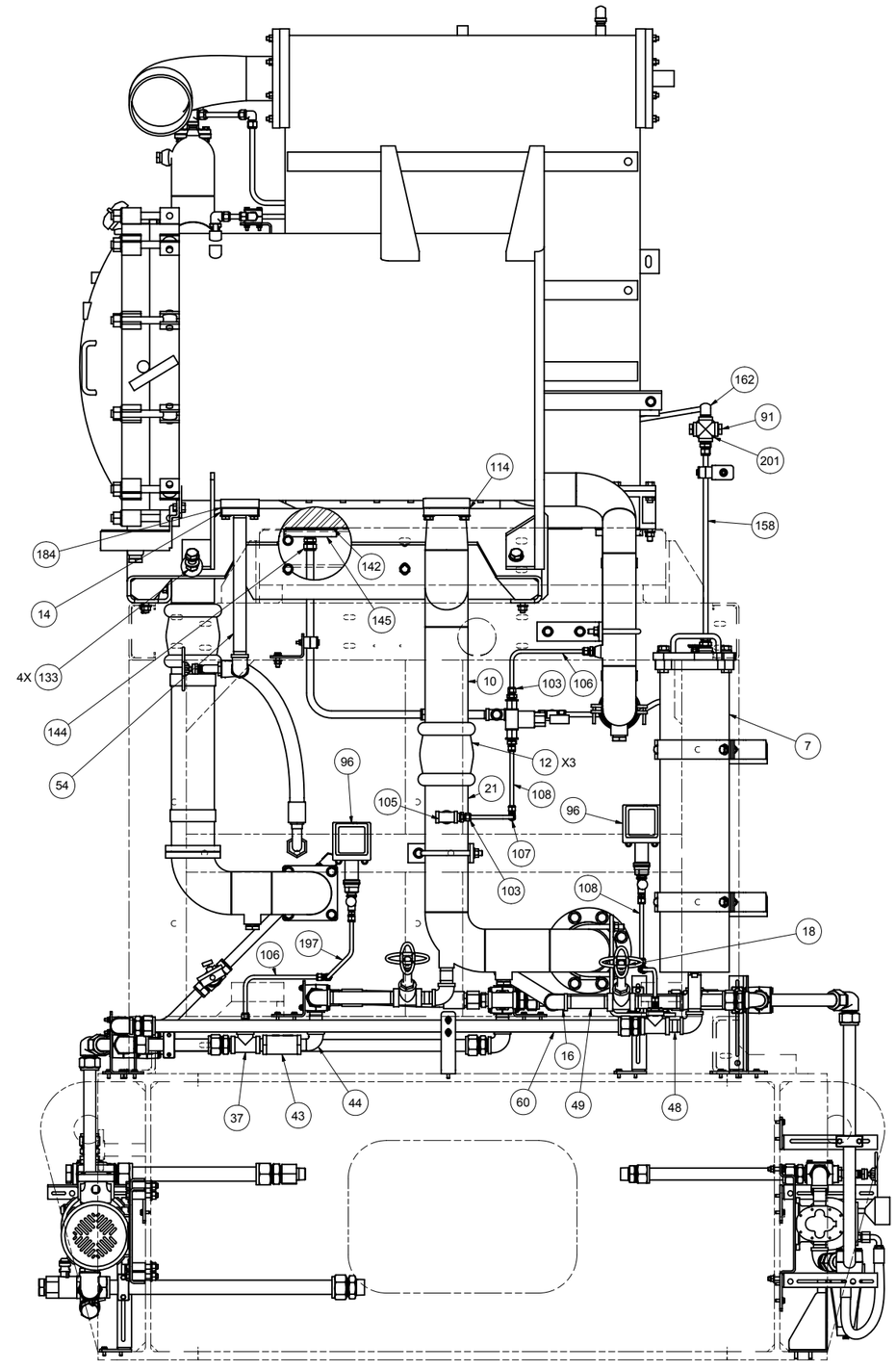

BACK VIEW

STEWART & STEVENSON LLC

TITLE

LUBE OIL SYSTEM, INSTALATION, DM3580EG7C-T2

SIZE	CAGE CODE	DWG NO	REV
D	81381	27101007	C

SCALE: NTS FILE: 27101007.idw SHEET 10 OF 10

REVISION HISTORY					
REV	DESCRIPTION	DESIGNER	CHECKED BY	ENGINEER	APP. DATE
-	INITIAL RELEASE PER ECO-001574	M. AALY	B. RAMIREZ	M. AALY	07/14/2009

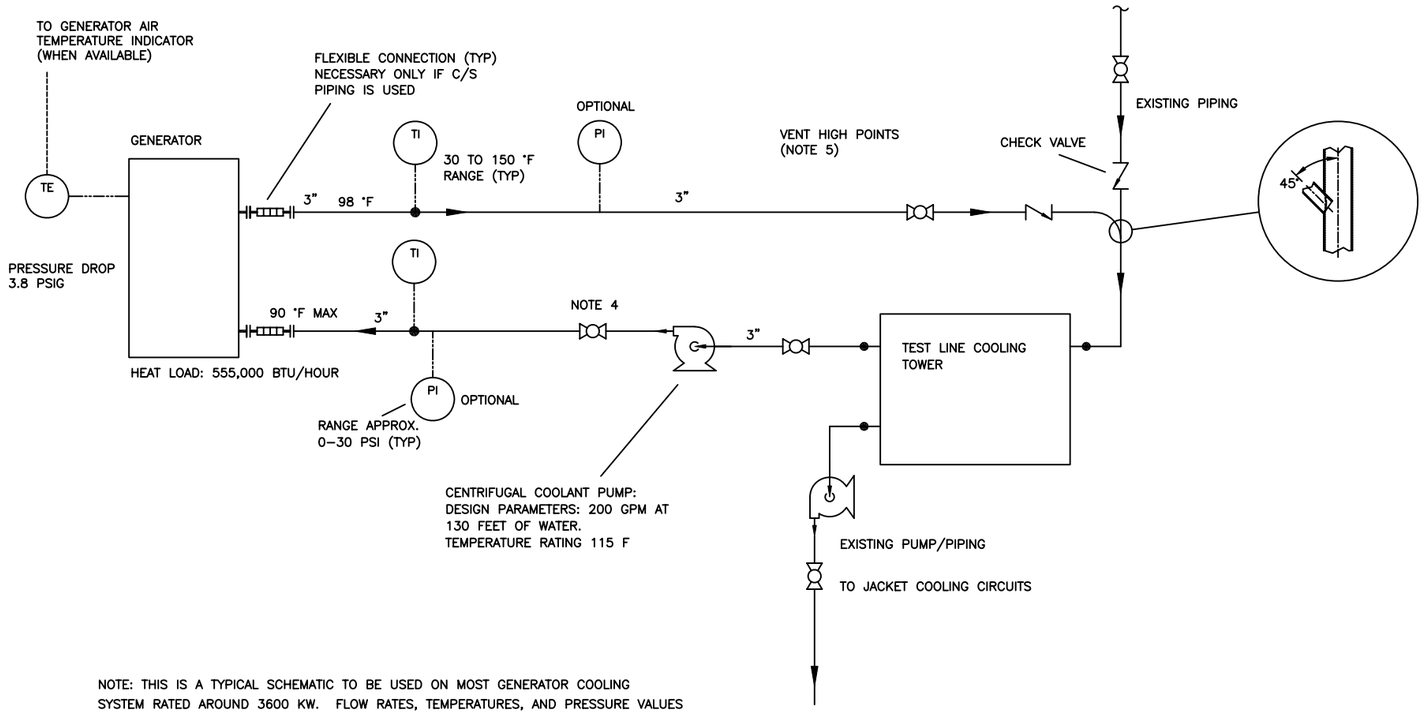

NOTE: THIS IS A TYPICAL SCHEMATIC TO BE USED ON MOST GENERATOR COOLING SYSTEM RATED AROUND 3600 KW. FLOW RATES, TEMPERATURES, AND PRESSURE VALUES SHOWN ARE BASED ON SOME SPECIFIC CONDITIONS THAT MAY NOT BE THE SAME FOR ALL OTHER FUTURE CASES. CALCULATIONS TO BE DONE ON AN INDIVIDUAL CASES.

LEGEND :

- BALL VALVE
- FLEXIBLE CONNECTION
- "Y" TYPE STRAINER
- GEAR PUMP
- HAND PUMP
- DUPLEX FILTER (STRAINER)
- INJECTOR
- LINE FILTER (STRAINER)
- NEEDLE VALVE
- SWING CHECK VALVE
- BALL/SPRING CHECK VALVE
- TS THERMOSTAT
- XXX ANNUNCIATED IN CONTROL PANEL
- THREADED PIPE CONNECTION
- PI LOCAL INSTRUMENT PANEL MOUNTED
- FLANGED CONNECTIONS
- PI LOCALLY MOUNTED PRESSURE INDICATOR
- GATE VALVE
- TE TEMPERATURE ELEMENT (RTD, ETC)
- BUTTERFLY VALVE
- BALL VALVE (NORMALLY OPEN)
- BALL VALVE (NORMALLY CLOSED)

NOTES:

1– USE WATER FOR TESTING (POSSIBLY COOLING TOWER).
2– UTILIZE SUITABLE FLEXIBLE CONNECTION FOR INTERFACE PIPING IF REQUIRED.
3– ADDITIONAL INSTRUMENTATION MAY BE REQUIRED BY "TEST PROCEDURE". FIELD INSTALL AS NECESSARY.
4– THROTTLE VALVE FOR GENERATOR COOLING AIR INLET TEMPERATURE BETWEEN 113 AND 130 °F TO REDUCE POSSIBILITY OF CONDENSATION FORMING ON THE COOLING SURFACES.
5– AVOID AIR POCKETS BY ALL MEANS. VENT WHERE INEVITABLE.

UNLESS OTHERWISE SPECIFIED ALL DIMENSIONS ARE IN INCHES. DIMS IN [] ARE IN mm, AND ARE FOR REFERENCE ONLY.

TOLERANCES UNLESS NOTED OTHERWISE
.X = ± .1
.XX = ± .06
.XXX = ± .005

ANGLES = ± .5°

DRAWN	M. AALY	07/14/2009
CHECKED	B. RAMIREZ	07/14/2009
PROJ ENG	M. AALY	07/14/2009

THIRD ANGLE PROJECTION

STEWART & STEVENSON LLC

TITLE: GENERATOR COOLING SCHEMATIC, TESTLINE SETUP DM3580EG GENSET

SIZE	CAGE CODE	DWG NO	REV
D	81381	27102906	-

SCALE: NONE FILE: 27102906.dwg SHEET 1 OF 1

REVISION HISTORY					
REV	DESCRIPTION	DESIGNER	CHECKED BY	ENGINEER	APP. DATE
-	INITIAL RELEASE PER ECO-003264	M. AALY	B. RAMIREZ	M. AALY	03/04/2010

NOTES:

1– SEE IMPORTANT NOTES ON SHEET 2.
2– REFERENCE GA DRAWING NUMBER 26110888.
3– REFERENCE VIBRATION ISOLATOR INSTALLATION INSTRUCTION NUMBER 07A–1714.

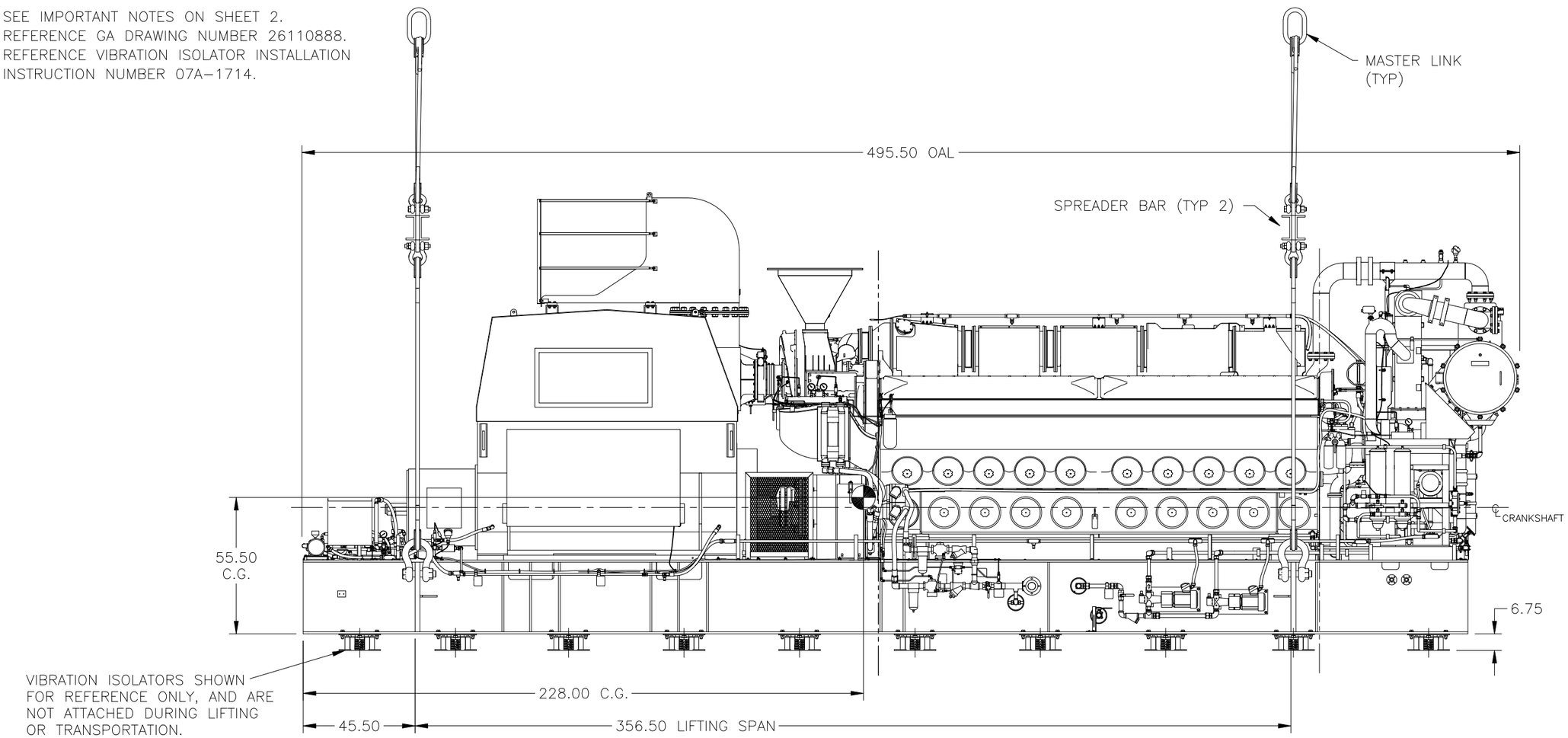

UNLESS OTHERWISE SPECIFIED
ALL DIMENSIONS ARE IN INCHES.
DIMS IN [] ARE IN mm, AND
ARE FOR REFERENCE ONLY.

TOLERANCES UNLESS NOTED OTHERWISE
.X = ± .25
.XX = ± .13
.XXX = ± .03

ANGLES = ± .5°

DRAWN	M. AALY	03/03/2010
CHECKED	B. RAMIREZ	03/03/2010
PROJ ENG	M. AALY	03/03/2010

THIRD ANGLE PROJECTION

STEWART & STEVENSON LLC

TITLE: LIFTING RIG SUGGESTION FOR DM3580EG7C-T2 GENERATOR SET

SIZE	CAGE CODE	DWG NO	REV
D	81381	27106483	-

SCALE: N/A FILE: 27106483.dwg SHEET 1 OF 2

RELEASED

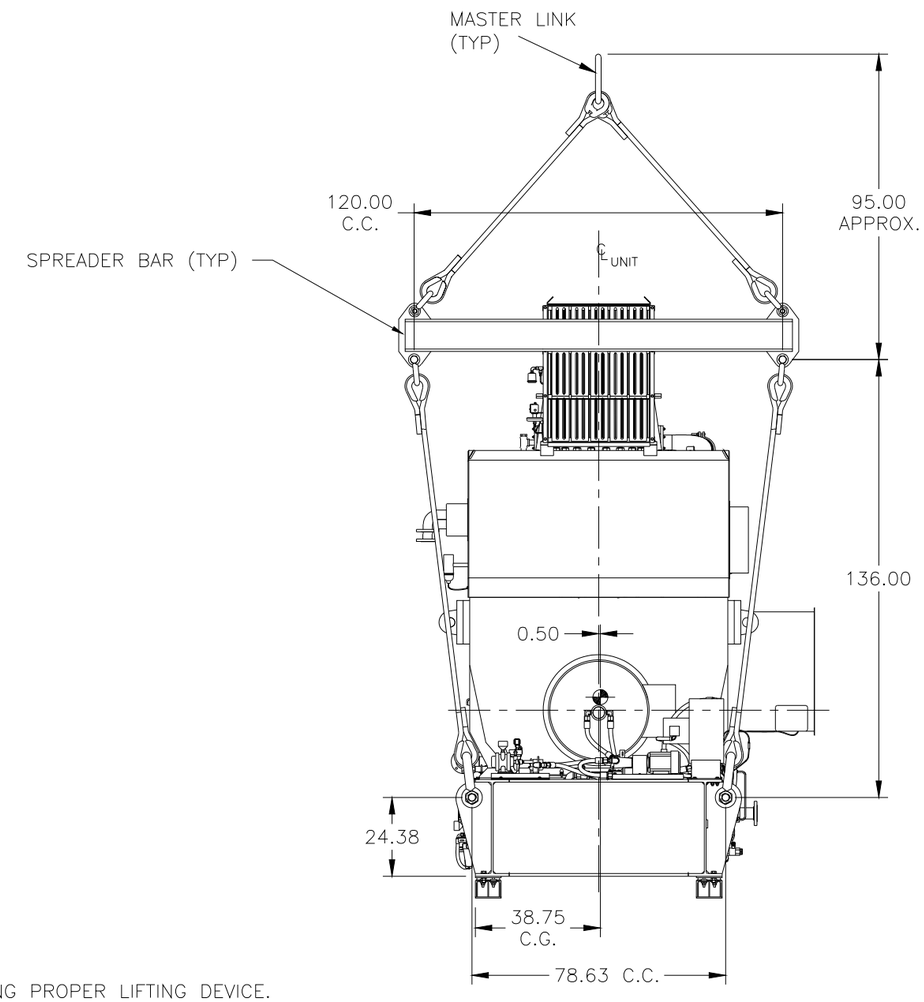

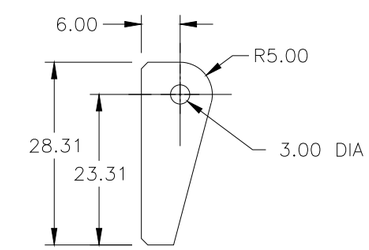

LIFTING LUG DETAILS

NO ALLOWANCE IS GIVEN FOR OUT-OF-PLANE LOADING.
(VERTICAL LIFT ONLY)

NOTES:

1- THIS DRAWING SHOWS SUGGESTED LIFTING RIG.
ANY DATA GIVEN IS STRICTLY TO AID OTHERS IN DESIGNING PROPER LIFTING DEVICE.

2- CALCULATED UNIT DRY WEIGHT: 133,000 LBS [59,375 KG]
DOES NOT INCLUDE WEIGHT OF LIFTING RIG ASSEMBLY.

3- COMPLETE LIFTING DEVICE MUST BE DESIGNED WITH SUFFICIENT FACTOR OF SAFETY.

4- THE UNIT IS NOT DESIGNED FOR A SINGLE POINT LIFT. IF A SINGLE POINT LIFTING CAN NOT BE AVOIDED, THEN ALLOWANCE MUST BE GIVEN FOR OFF-CENTER LIFTING LUGS WITH RESPECT TO CENTER OF GRAVITY.

5- AFTER INSTALLATION AND LEVELING, ENGINE/GENERATOR/COUPLING ALIGNMENT MUST BE CHECKED.
PERFORM ALIGNMENT IN ACCORDANCE WITH APPROVED PROCEDURES ONLY IF NEEDED.
AFTER FINAL ALIGNMENT, THE GENERATOR MUST BE DOWELED IN PLACE.

STEWART & STEVENSON LLC

TITLE
LIFTING RIG SUGGESTION
FOR DM3580EG7C-T2
GENERATOR SET

SIZE	CAGE CODE	DWG NO	REV
D	81381	27106483	-

SCALE: NTS FILE: 27106483.dwg SHEET 2 OF 2

RELEASED

	STEWART & STEVENSON, LLC **POWER GENERATION DIVISION** **FACTORY TEST PROCEDURE, DM3580EG7C-T2** **3580 KW, 11,000 VOLT, 0.8 PF, 60 HZ, 900 RPM** **ENGINE GENERATOR SET**	PROCEDURE NO. ES-749 REVISION: - ISSUED: 07/13/2009 ORIG. ISSUE: 07/13/2009 PER ECO-001574

S&S SALES ORDER NOs:
SO6098943, SO6098951, and SO6098960

CUSTOMER:
Noble Drilling

PROJECT NAMES:
Leo Segerius, Murvalenko, Roger Eason

PO NUMBERS:
4500019362, 4500019363, and 4500019364,

TEST LOCATION:
STEWART & STEVENSON, LLC
POWER GENERATION DIVISION
10750 TELGE ROAD
HOUSTON, TX 77095

STEWART & STEVENSON
MODEL NUMBER DM3580EG7C-T2
DIESEL GENERATOR SET

RATED

3580 KW, 11KV, 60HZ at 900 RPM, 3-PHASE, 0.7 PF (FAT at 0.8 PF)

TEST RESULTS APPROVAL

To be signed after completion of all testing, thereby confirming the reported results.

TEST SUPERVISOR (or Designee)	DATE
ELECTRICAL ENGINEER (or Designee)	DATE
MECHANICAL ENGINEER (or Designee)	DATE
QUALITY ASSURANCE (or Designee)	DATE
WITNESS #1 (If applicable)	DATE
WITNESS #2 (If applicable)	DATE

TABLE OF CONTENTS

TEST CONDITIONS

RECORDS:

All failures, malfunctions, and maintenance will be recorded. Copies of the completed tests will be available for inspection, and submitted as required upon completion of the series of tests.

ATMOSPHERIC CONDITIONS:

All tests will be conducted at ambient temperature and barometric pressures and recorded on the Performance Data Sheet (see attachment).

INSTRUMENTATION:

All instrumentation used during testing will be recorded on the Test Instrumentation Record (see attachment). Recorded performance data will be collected by observed readings of via data recorders.

Electrical parameters (AC voltage, AC amperage, Frequency, Power Factor, etc.) will be monitored via meters and/or power analyzers. Speed will be monitored via a magnetic speed pickup, as required.

Temperatures will be monitored via thermocouples, RTDs and thermometers, then recorded in degrees Fahrenheit.

Pressures will be monitored via pressure transmitters and gauges, then recorded in applicable units of measure.

GENERAL TEST:

The generator set under test will be tested utilizing selected components supplied under the procurement document along with S&S Test Facility components as practical. The generator set will be set up for normal operation with all systems functioning unless, otherwise noted in the individual procedure. Load will be supplied by the use of appropriate load banks. Load bank accuracy will be within ± 5% of the required load step when load banks are at operating temperatures and ± 10% when load banks are cold. All connections to support equipment/operating fluid will be made by appropriate piping and cabling.

FUEL:

All engine/generator tests will be performed utilizing fuel conforming to Grade DF-2.

COOLANT:

All testing will be performed utilizing water mixed with a rust inhibitor, per engine manufacturer's guidelines.

LUBE OIL:

All testing will be performed utilizing lube oil in accordance with engine and generator manufacturer's specification.

TEST SEQUENCE:

Tests will be performed in the most practical and expedient sequence, without necessarily following the sequence in this document, unless specifically referenced in the individual test procedure.

GENERAL NOTES

(1) The generator set completed for this order shall be subjected to tests as specified in Sales Order Summary, procurement order, and approved documents.

(2) System schematics shall be used to verify connections. Refer to 27102847 for a listing.

(3) Any subsystem test required by customer will be performed by the equipment manufacturer, or Stewart & Stevenson, and will be submitted under separate cover.

(4) All factory tests will be witnessed by an ABS representative.

SECTION - I
ENGINE START-UP

Technician/Date

1.0 PRE-START PROCEDURES:

_____ 1.1 Complete the Equipment Data Sheet (see attachment).

1.2 Fuel System:

_____ 1.2.1 Verify fuel supply and return connection on skid.

_____ 1.2.2 Prime fuel filters.

1.3 Service Unit:

_____ 1.3.1 Install drain cocks for units to be drained.

_____ 1.3.2 Install plugs for units to be left serviced.

NOTE: VERIFY PROPER SERVICING PROCEDURE IN APPLICABLE SERVICE MANUAL.

_____ 1.3.3 Verify that oil filter elements are in place.

_____ 1.3.3.1 Fill with appropriate lube oil. Record type_____.

_____ 1.3.3.2 Verify correct lube oil level in the engine oil sump.

_____ 1.3.4 Fill with appropriate coolant. Record type_____.

_____ 1.3.4.1 Verify correct coolant level.

_____ 1.3.5 Connect a suitable exhaust system to the unit (as applicable).

_____ 1.3.6 Verify Both engine and the generator skid bonding.

_____ 1.3.7 Connect a suitable cooling system to generator coolant inlet and outlet ports in accordance with the reference drawing 27102906.

_____ 1.3.8 Check and verify generator bearing lubrication piping and components, and fill generator bearing lube oil tank with approx. 10-15 gallons of ISO VG 46 type lube oil. ISO VG 46 is approximately equivalent to SAE 15W crankcase oil.

_____ 1.3.9 Start electric pumps and check line pressure gauges and if pressure rising too rapidly, turn off the pump and check for restricted flow path. Normal pressure range is a few to 15 PSI.

_____ 1.3.9.1 Electric pumps for engine prelube/circulating and turbo charger pre/post lube oil (Soakback) should be running as long as the unit is down. Generator backup bearing lube pump runs before starting and then turns on and off intermittently 10 minutes every one hour, also runs in case of generator gear driven pump failure during unit operation. Air driven pumps are backups for electric pumps.

_____ 1.3.9.2 During standby period, simulate 480 VAC failure and veify air driven pumps take over the operation. Generator air driven pump will start only if electric pump is enabled.

Technician/Date

_____ 1.3.9 Start the unit and perform hot bearing check per engine manufacturer approved procedures.

_____ 2.0 START-UP PROCEDURES:

_____ 2.1 Start the generator set and operate it at idle speed until oil pressure is 20 psi minimum and determine that there is no abnormal noise or vibration.
At this stage, it is critical to check generator bearings temperature as well. If bearing temperature rises rapidly, stop and check for cause.

_____ 2.2 Opearate generator set at rated speed. Inspect the unit for leaks, abnormal noises, or vibration at rated speed. Replenish operation fluids as necessary.

_____ 2.3 Gradually apply load until achieve the rated load. During unit load run, visually verify no leaks are present.
Note: If unit does not pull required load, notify Engineering.

_____ 2.4 Check generator bearing lube oil inlet pressure. It should be in the range of 18 to 22 PSI.

_____ 2.5 Check generator bearing lube oil inlet temperature. It should be in the range of 137 to 143 degrees F.

_____ 2.6 Monitor bearing, air inlet, and stator temperatures by measuring resistance across RTD terminal points (refer to KATO 888-00223-40).
STOP the unit if resistance for bearing & air inlet exceeds 136.6 OHMS. This resistance is equivalent to 203 °F and is in shutdown point. For the stator this value is 162.9 OHMS and equivalent to 329 °F.

_____ 2.7 Set minimum no-load RPM. Record _____ RPM

_____ 2.8 Set maximum no-load RPM. Record _____RPM

_____ 2.9 Verify oil pressure at operating temperature.

	PSI	RPM
IDLE		
FULL THROTTLE/LOAD		

SAFETY ALARMS AND SHUTDOWNS TEST

OBJECTIVE:

To demonstrate operation of each safety device furnished with the Generator Set.

ACCEPT/REJECT CRITERIA:

Each safety device must activate the appropriate audible and visual alarms and where required, activate a shutdown.

PROCEDURE:

1. Check each safety device by simulation.
2. Record actual alarm and trip points for each safety device where applicable on the Safety Alarm and Shutdown Record (see attachment).

SECTION III
STANDARD ENGINE/GENERATOR TEST

TECHNICIAN/DATE

1.0 PRE-CHECKS:
Note: Reference section I attachment of the EMD Marine Drilling Unit Operating Manual Section nine.

_____ 1.1 Interconnect as required.

_____ 1.2 Connect a ground cable to the unit.

_____ 1.3 Connect suitable load to the unit. Check PERFORMANCE DATA SHEET for the required voltage, frequency, load and power factor

_____ 1.4 Make a nomenclature check for proper voltage, speed, and pressures on all components, i.e. panels, switchgear, motors.

_____ 1.5 For voltage above 480 volts, connect a suitable step-down transformer between the generator unit and the load bank.

NOTE: CARE SHOULD BE TAKEN TO SHORT OUT ALL UNUSED CURRENT TRANSFORMERS.

TECHNICIAN/DATE

2.0 START-UP CHECKS:

Record hour meter reading_____.

2.1 Voltage Control:

_____ 2.1.1 Start generator set and bring to rated speed.

_____ 2.1.2 Put the automatic voltage control rheostat at minimum range. Place the voltage regulator in the automatic mode and observe the voltage level. Adjust to achieve 11KVAC generator output.

2.2 Control Panel Operation:

_____ 2.2.1 Verify operation of auto start controls.

_____ 2.2.2 Check generator safety controls as applicable.

_____ 2.2.3 Verify breaker operation in switchgear as applicable.

_____ 2.2.4 Check operation of speed controls selector switch in local and remote modes. (0-5V simulation)

3.0 PERFORMANCE TESTS:

_____ 3.1 Start and operate the unit at no-load idle speed until temperatures are stable.

_____ 3.2 Record date, time, ambient temperature and barometric pressure at start of test. The test run will consist of the following load levels at 0.8 PF. Allow unit operating temperatures to stabilize between each step. Record data as indicated on PERFORMANCE DATA SHEET.

_____ 3.2.1 15 minutes at 25% load (895 KW) (1119 KVA)

_____ 3.2.2 15 minutes at 50% load (1790 KW) (2238 KVA)

_____ 3.2.3 15 minutes at 75% load (2685 KW) (3356 KVA)

_____ 3.2.4 60 minutes at 100% load (3580 KW) (4475 KVA)

_____ 3.3 Operate the unit at 110% power (3938 KW) (4923 KVA), at 0.8 power factor, for 15 minutes and record pressures, voltage, amperes, and temperature on the performance sheet.

_____ 3.4 Start the unit and wait for a steady state condition, then from no load, verify the following step loads. For each step, record voltage and frequency transients.

_____ 3.4.1 Apply 50% of rated load.

_____ 3.4.2 After voltage and frequency stabilize, apply remaining rated load (100%).

_____ 3.4.3 Remove 100% rated load in one step.

_____ 3.5 Request witness to verify test results (if applicable).

_____ 3.6 Record final hour meter reading_____.

SOLD TO:	Noble Drilling			
ADDRESS:				
			DATE:	
CONTRACT No.:	SO 6098943, 6098951, 6098960			
MODEL No.:	DM3580EG7C-T2 (EMD ME20-710G7C)		RECORDED BY:	
SERIAL No.:				
RATING:	3580 KW, 11 KV, 60 HZ, 3 PH, 0.7 PF			
			QUALITY INSP.:	
SERVICE:	MARINE DRILLING			
		OFFICIAL TEST RECORD		

EQUIPMENT DATA SHEET		
GENERATOR	ENGINE	SWITCHGEAR
Make	Make	Voltmeter Make
Model #	Serial #	Scale
Serial #	Model #	Ammeter Make
Type: Brushless Brush	Fuel	Scale CT Ratio
KVA KW	Injector Size	Freq. Meter Make
PF Volt	Cooling	Scale
Excitation Type	Starting Aid Make	Wattmeter Make
Model # Volt	Model # Volt	Scale CT Ratio
Field Amps RPM	Starter	Power Factor Meter Make
Governor Make	Make	Time Meter Make
Part #	Model #	Phase Meter Make
Type:	Battery Charger	Voltage Regulator Make
Actuator Make	Make No	Model Volt
Part #	Alternator	Circuit Breaker Make
Controller Make	Make No	Type Rated Amps
Part #	Overspeed Make	Overload Make
	Model #	Model
	Oil Pressure Gage ( ) Water Temp ( ) Batt Amp ( )	Trip Amps
	Fuel Pressure Gage ( ) Tach ( ) Other	Electronic Control Make
		No Volts CPS

SOLD TO:	Noble Drilling			
ADDRESS:				
			DATE:	
CONTRACT No.:	SO 6098943, 6098951, 6098960			
MODEL No.:	DM3580EG7C-T2 (EMD ME20-710G7C)		RECORDED BY:	
SERIAL No.:				
RATING:	3580 KW, 11 KV, 60 HZ, 3 PH, 0.7 PF			
			QUALITY INSP.:	
SERVICE:	MARINE DRILLING			
		OFFICIAL TEST RECORD		

TEST INSTRUMENTATION RECORD				
	INSTRUMENT TYPE AND FUNCTION	SERIAL NUMBER	DATE CALIBRATED	DATE
1				
2				
3				
4				
5				
6				
7				
8				
9				
10				
11				
12				
13				
14				
15				
16				
17				
18				
19				
20				
21				

SOLD TO:	Noble Drilling			
ADDRESS:				
			DATE:	
CONTRACT No.:	SO 6098943, 6098951, 6098960			
MODEL No.:	DM3580EG7C-T2 (EMD ME20-710G7C)		RECORDED BY:	
SERIAL No.:				
RATING:	3580 KW, 11 KV, 60 HZ, 3 PH, 0.7 PF			
			QUALITY INSP.:	
SERVICE:	MARINE DRILLING			
		OFFICIAL TEST RECORD		

SAFETY ALARM AND SHUTDOWN RECORD

No.	DESCRIPTION OF SAFETY	DESIGN TRIP SETPOINT	NORMAL OPERATING RANGE @ FULL LOAD	OBSERVED SETPOINT	ALARM	SHUTDOWN
1.	High Jacket Water Temperature (EMDEC)	[Switch]	190-212 °F			X
2.	Low Oil Pressure (EMDEC)	[Switch]	40-100 PSIG			X
3.	High Crankcase Pressure (EMDEC)	[Switch]	0.8-1.3” H_2O			X
4.	Low Engine Coolant Level	[switch]	[switch]		X	
5.	Low Engine Oil Level	[switch]	[switch]		X	
6.	High Oil Temperature (EMDEC)	[switch]	210-225 °F			X
7.	High Oil Temperature	220 ºF	200–215 ºF		X	
8.	Low Turbo soakback Oil Pressure	6 PSIG	8–30 PSIG		X	
9.	Low Pre Lube Oil Pressure	5 PSIG	10-20 PSIG		X	
10.	High Intake Air Filter Restriction	14” H_2O	6-10” H_2O		X	
11.	Emergency Stop	[switch]	[switch]			X
12.	Low Lube Oil Temperature	80 ºF	85-100 ºF		X	
13.	Overspeed Shutdown (ESS)	990	899-902 RPM			X
14.	Engine Overcrank (Failed to Start)	3 attempts	3 attempts		X	Lockout
15.	Intake Air Shut off Valve Tripped	[switch]	[switch]		X	Lockout
16.	Engine Mode Selector Not in Remote Auto	[switch]	[switch]		X	
17.	Generator Lock-Out Relay Shutdown	[switch]	[switch]			X
18.	High Cylinder Temperature	1200 ºF	850–1100 ºF		X	
19.	Low Oil Pressure	37 PSIG	50–100 PSIG		X	
20.	High Jacket Water Temperature	205 ºF	190– 212 ºF		X	
21.	Low Fuel Pressure	35 PSIG	60–95 PSIG		X	
22.	Low Jacket Water Pressure (EDMEC)	[switch]	30-65 PSIG		X	
23.	High Lube Oil Filter Differential Pressure	20 PSIG	5-15 PSIG		X	

NOTE: Observed Setpoint should be ±5% of Design Setpoint or ±1 unit whichever is greater. Expected range based on full rated load.

SOLD TO:	Noble Drilling			
ADDRESS:				
			DATE:	
CONTRACT No.:	SO 6098943, 6098951, 6098960			
MODEL No.:	DM3580EG7C-T2 (EMD ME20-710G7C)		RECORDED BY:	
SERIAL No.:				
RATING:	3580 KW, 11 KV, 60 HZ, 3 PH, 0.7 PF			
			QUALITY INSP.:	
SERVICE:	MARINE DRILLING			
		OFFICIAL TEST RECORD		

SAFETY ALARM AND SHUTDOWN RECORD

No.	DESCRIPTION OF SAFETY	DESIGN TRIP SETPOINT	NORMAL OPEARING RANGE @ FULL LOAD	OBSERVED SETPOINT	ALARM	SHUTDOWN
24.	High Fuel Oil Filter Differential Pressure	10 PSIG	4-7 PSIG		X	
25.	High Engine Main Bearing Temperature	270 °F	200-260 °F		X	
26.	High Engine Main Bearing Temperature	290 °F	200-260 °F			X
27.	High Generator Stator Temperature	(159 Ω) 311 °F	290-305 °F		X	
28.	High Generator Stator Temperature	(162 Ω) 329 °F	290-305 °F			X
29.	High Generator Bearing Temperature	(133 Ω) 185 °F	160-175 °F		X	
30.	High Generator Bearing Temperature	(136 Ω) 203 °F	160-175 °F			X
31.	High Generator Air Inlet	(133 Ω) 185 °F	113-170 °F		X	
32.	Low Generator Bearing Lube Oil Pressure	14 PSIG	18-22 PSIG		X	
33.	High Generator Bearing Lube Oil Temperature	145 °F	137-140 °F		X	
34.	Generator Coolant leak	[switch]	-		X	
35.	Low Starting Air Pressure	80 PSIG	90-125 PSIG		X	
36.						
37.						
38.						
39.						
40.						
41.						
42.						
43.						
44.						
45.						
46.						

NOTE: Observed Setpoint should be ±5% of Design Setpoint or ±1 unit whichever is greater. Expected range based on full rated load.

SOLD TO:	Noble Drilling			
ADDRESS:				
			DATE:	
CONTRACT No.:	SO 6098943, 6098951, 6098960			
MODEL No.:	DM3580EG7C-T2 (EMD ME20-710G7C)		RECORDED BY:	
SERIAL No.:				
RATING:	3580 KW, 11 KV, 60 HZ, 3 PH, 0.7 PF			
			QUALITY INSP.:	
SERVICE:	MARINE DRILLING			
		OFFICIAL TEST RECORD		

PERFORMANCE DATA SHEET					
		Paragraph 3.2	Paragraph 3.3	Paragraph 3.4	
Data Recorder filename					
Date (MM/DD/YYYY)					
Time (HH:MM)					
Ambient temperature (ºF)					
Barometric pressure (inches-Hg)					
Recording interval		10 seconds	10 seconds	5 milliseconds	
Generator frequency (Hz.)		Y	Y	Y	
Generator voltage, 1-phase (volts)		Y	Y	Y	
Generator amperage, 3-phase (amps)		Y	Y	Y	
Power (KW)		Y	Y	Y	
Power Factor		Y	Y	Y	
Engine speed (RPM)		Y	Y	Y	
Lube oil pressure (PSIG)		Y	Y	N	
Fuel pressure (PSIG)		Y	Y	N	
Lube oil temperature (ºF)		Y	Y	N	
Jacket water temperature (ºF)		Y	Y	N	
Post turbo exhaust temperature (ºF)		Y	Y	N	
Generator stator temperature, phase A (ºF)		Y	Y	N	
Generator bearing temperature, rear (ºF)		Y	Y	N	

Start Up Procedures for Marine Drilling Units

Start Up Procedures for Marine Drilling Units

INTRODUCTION

This publication contains general information and instructions applicable to installation, alignment, checkout, and operation of marine drilling power units.

The material included is determined from the basic marine drilling power unit and common extra equipment. However, the appearance herein or absence of coverage for any particular system or component in no way implies that the equipment is or is not part of any specific purchase order. Wiring diagrams and installation drawings for specific units take precedence or information presented in this publication.
Additional information on installation, alignment, checkout and operation may be obtained from an S&S Service Representative.

For specific equipment, it is advised that due consideration be given to the manufacturer's pamphlets and bulletins.

Customer:	Noble Drilling	**Customer PO No.:**	4500019364/..362/..
Work Order:		**Engine Model No.:**	L20-710G7C-T2
Location:		**Engine S/N:**	
Unit No.:		**Generator M/N:**	8P12-4400
ES No. :	ES-750 Rev -	**Generator S/N:**	

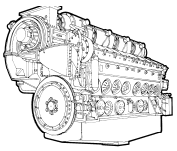

POWER UNIT
MOUNTING GUIDELINES

In view of the varied installations involved with industrial and drilling base mounted power units, it is not possible for Stewart & Stevenson (S&S) to recommend a standard base mounting instruction. There are however, certain minimum parameters that may be prescribed that will not change from one installation to another.

The supporting members for the power unit assembly are to be designed to provide an adequate foundation that will maintain equipment alignment and absorb or resist the dynamic forces produced during normal operation. The mounting points should be square with one another, level and at the same elevation within ± 1/8 inch. If necessary, this can be accomplished through the use of shimming.

The foundation or mounting platform should be designed so that the power unit base, in no way becomes a structural member of the installation. It should support only the basic S&S equipment applied at the factory and should not be used to mount other auxiliary machinery.

After mounting and before operation, the alignment of the S&S equipment should be checked. Although this is set initially at the factory, shipping and the mounting operation may cause some deviation.

While the above mounting information is intended as a guideline for S&S customers, the ultimate responsibility of the power unit mounting structure and any associated vibrations is that of the customer.

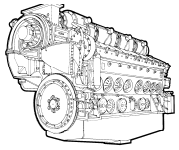

ENGINE TO GENERATOR ALIGNMENT

The alignment of generator with engine is divided into two operations:

1. Angular – correcting the angularity of generator axial centerline to the actual shaft or coupling rotational axis. Angular alignement refers to the angle that one shaft makes with another shaft at their coupling interface.

2. Radial – balancing and setting the center of the shaft in a plane perpendicular to the main axis of the shaft. Where two shafts are coupled together, the reference point is the center of rotation of one of the shaft.

3. Angular and radial alignment are carried out simultaneously.

GENERATOR RADIAL AND ANGULAR ALIGNMENT

Proper operation of the power plant requires that both the generator armature (rotor) shaft and the generator frame (stator housing) be in alignment with the engine crankshaft.

Since the generator has a bearing complex on each end of the generator armature (rotor) the alignment is simpler compared with single bearing generators. The radial and angular alignment is determined at the engine flywheel coupling coupled to the generator hub by using two dial indicators rigidly mounted on a support brackets bolted in the coupling face, usually on the driving shaft. Both indicators revolve with a full circle around the coupling, both indicators should read zero as they return to their original starting point. The plunger of one indicator will rest on the back of the coupling disc face or near the outer bolt circle to measure the angular alignment. The plunger of the other indicator will check the radial alignment as it rides on the machined outside diameter of the coupling perpendicular to the shaft.

Radial and angular alignment specification is ±.006” TIR. Record readings on alignment form.

DIAL INDICATOR MOUNTING

Built a dial Indicator stand, bolted rigidly to coupling face as shown in Fig.#1.
Install the magnetic fixture with the Dial Indicator pointed to smooth surface of the coupling as shown in Fig 2 & 3.

(note: actual coupling may be different than shown).

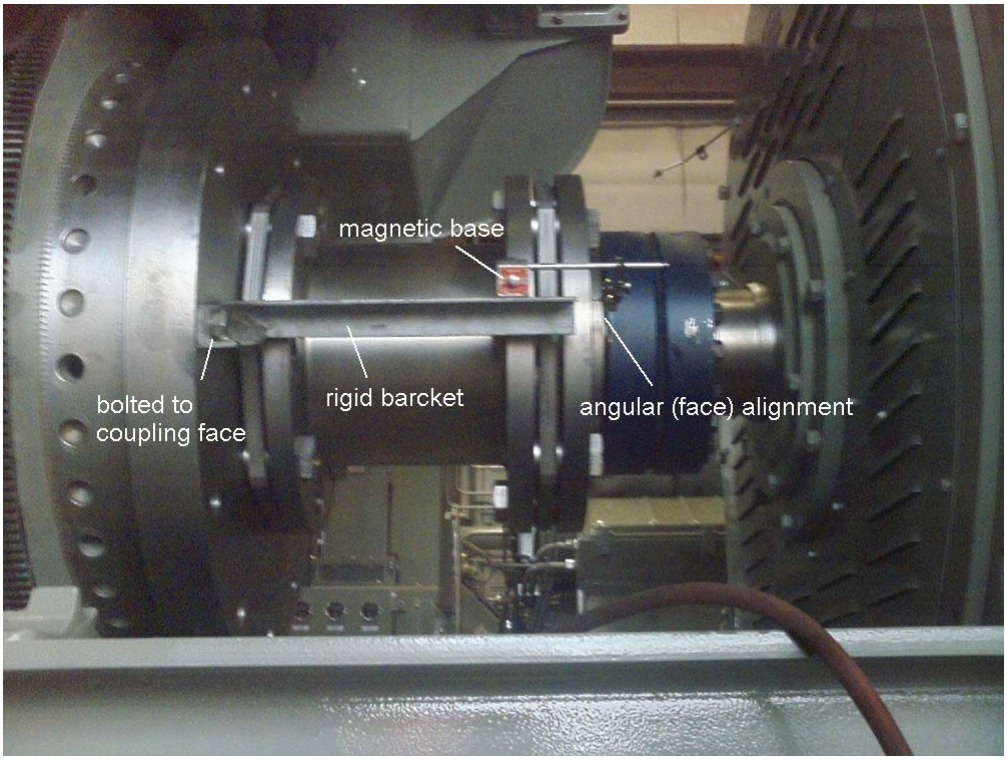
magnetic base
bolted to
coupling face
rigid barcket
angular (face) alignment

FIG # 1

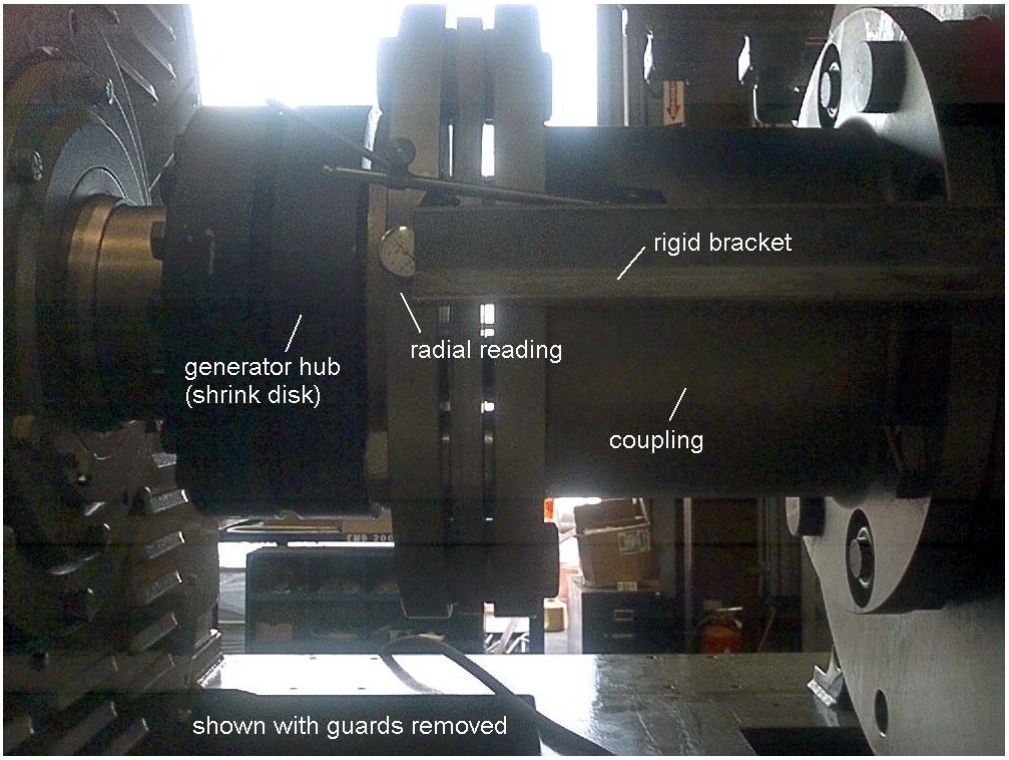
rigid bracket
generator hub
(shrink disk)
radial reading
coupling
shown with guards removed

FIG # 2

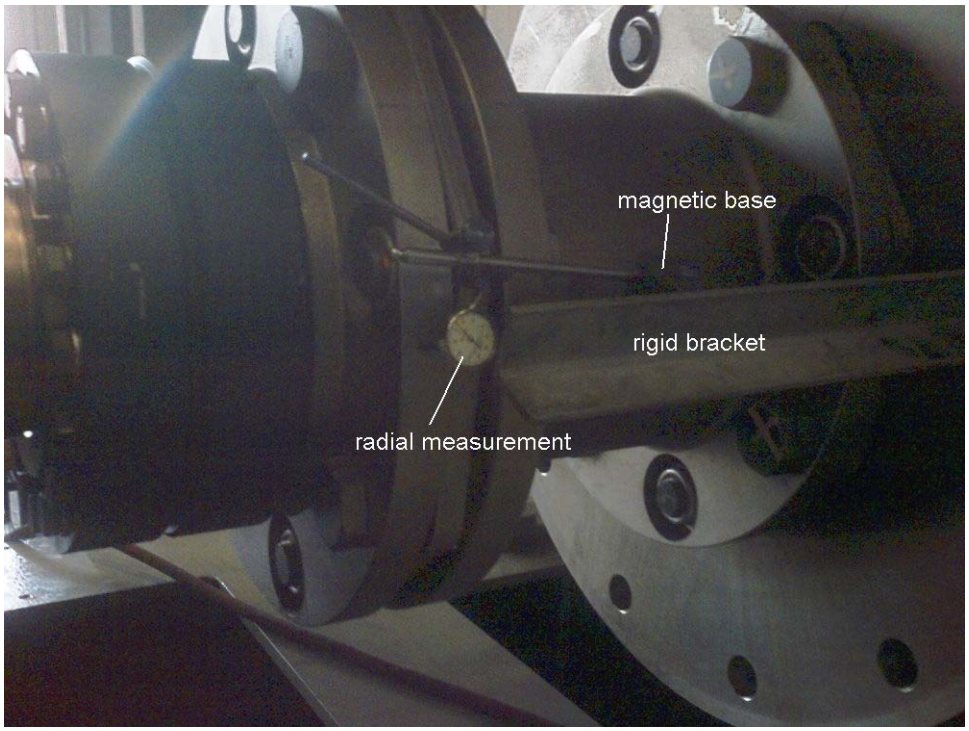

FIG # 3

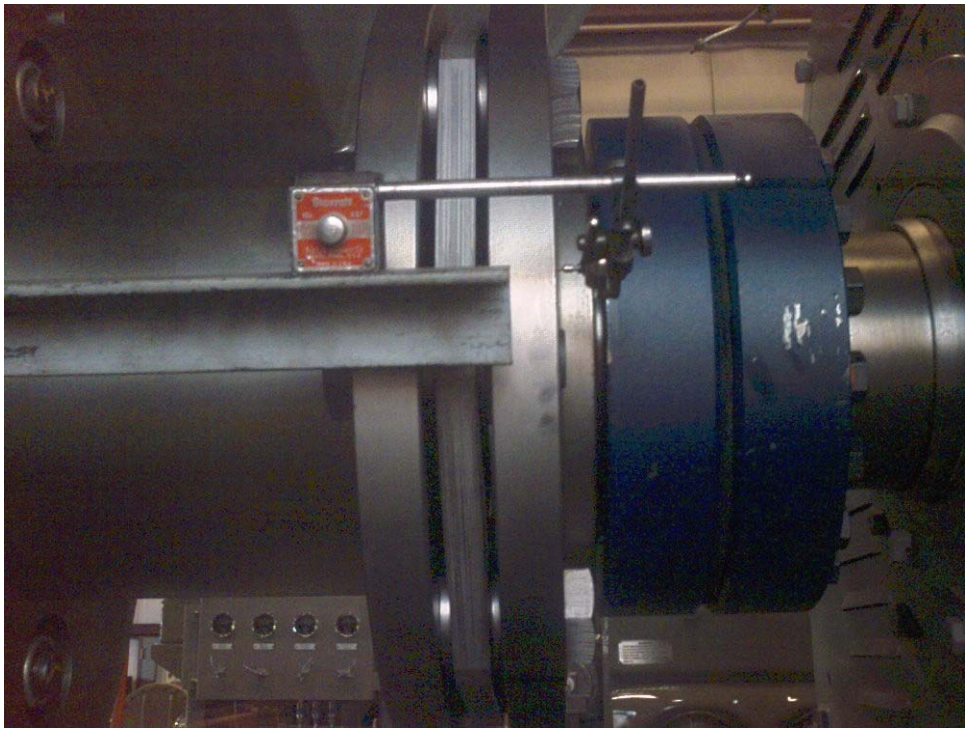

FIG # 3

TURBOCHARGER INSPECTION

Remove turbocharger exhaust transition piece. Removal or compression of exhaust expansion joint may be required to accomplish this task.

Visually inspect interior of turbocharger through exhaust port and air inlet for presence of any shipyard/construction debris that could damage the unit.

Insert a magnetic stick into the bottom of the turbocharger's exhaust chamber to check for any foreign steel objects that could damage the unit.

PIPING INSTALLATION

The installation and cleanliness of all piping external to the engine is the responsibility of the customer/shipyard.

The following instructions must be followed to ensure that all engine systems are protected from damage by foreign material.

Note: all lines (pipes) leaving the engine generator skid must have a flex connection.

Date: _____ Tech: _____

ACCESSORY INSPECTIONS

1. Remove engine air intake filters and inspect filter housing and air ducts for damage and foreign material.

   Date: _____ Tech: _____

2. Install a temporary 80-mesh screen at the junction of the return line from the fresh water cooler and the bypass piping. This screen will be used only during initial engine start to protect the engine cooling system from debris. (Not applicable on units factory pre-tested)

   Date: _____ Tech: _____

3. Blow out air supply piping to remove debris before connecting to air starting system strainer.

   Date: _____ Tech: _____

4. Remove air box drain plugs. The method used to accomplish air box draining is determined by the customer to suit the installation.

   Date: _____ Tech: _____

5. Check for proper installation of piping to water temperature regulator valve. The regulator flanges are marked A, B & C. The A flange receives the water from the engine outlet, the B flange is the bypass to the lube oil cooler, and the C flange connects to the heat exchanger.

   Date: _____ Tech: _____

6. Add about 15 gallons of new/clean generator bearing lube oil to bearing lube oil tank located at the exciter end of the generator. Remove generator bearing lubrication lines right at the rear and front inlet ports and place the ends in a temporary container. Run generator bearing electric lube oil pump long enough to verify clean oil is discharging from the end connection nozzles inside the temporary container. This removes any contaminants from lube lines. Remove/inspect and clean two orifices installed in front and rear bearing lubrication lines of any possible contaminants.

   Date: _____ Tech: _____

PRE-SERVICE ELECTRICAL INSPECTIONS

Verify all controller inputs and outputs.

The settings of the alarm switches and control relays should be checked in accordance with the relay and switch setting chart contained in the applicable physical schematic diagram and/or O&M manuals. It may be more convenient to check some of these settings during the initial engine start. *(For reference see Table A)*

LOCALLY MOUNTED CONTROLLER

1. Visually inspect controller for defects. Note customer connections to terminal boards.

   Date: _____ Tech: _____

2. Disable starting circuit, and turn power switch ON (refer to controller operation procedure) and check operation of all the switches.

   Date: _____ Tech: _____

3. Energize each alarm to ensure that each circuit functions properly. Most alarms can be energized by mechanically opening the standard pressure or temperature alarm switches. The crankcase pressure detector can be qualified with its alarm circuit by drawing a vacuum on the vent on top of the device to open the switch. See the alarms and shutdowns setting table 1

   Date: _____ Tech: _____

4. Check that the alarm off or reset switch functions properly on at least one of the alarms. See applicable schematic diagram.

Date: _____ Tech: _____

ENGINE PRESTART

Perform the following procedures prior to engine start to ensure that the engine and associated equipment are in operating condition

1. Remove air line lubricator and fill with SAE 20W oil into each canister.

Date: _____ Tech: _____

2. Fill engine cooling system with coolant to proper level as indicated by coolant sight glass. Inspect engine and accessories for water leaks. After completion of initial load test, add rust inhibitor, etc. . . *(Reference Table B)*

Date: _____ Tech: _____

3. Check that governor oil is at proper level. ***This does not apply to EMDEC equipped engines.***

Oil type: _____

Date: _____ Tech: _____

4. Check oil filter element installation to ensure that elements are properly seated and that cover gasket is in place and is not damaged.

Date: _____ Tech: _____

5. Check oil strainer for debris.

Date: _____ Tech: _____

6. Fill engine oil sump to FULL mark on the dipstick. *(Reference Table B)*

Date: _____ Tech: _____

7. Energize turbocharger soakback/immersion heater – do not start engine. Perform the following checks:

   a) Remove the rear oil pan handhole cover and confirm that oil is flowing from the rear gear train. If oil flow is not observed through the gear train, check soak back pump for proper rotation. Also check for a stuck check valve in the turbocharger oil filter head and the soak back filter head.

Date: _____ Tech: _____

b) Observe camshaft bearings. If lube oil flows from the camshaft bearings with the soak back pump running, and the engine shut down, inspect turbocharger lube oil filter outlet check valve for proper operation.

Date: _____ Tech: _____

8. Prelube engine as directed in the Engine Maintenance Manual. This includes checking for unrestricted oil flow at each piston cooling tube. (Connect external source to piston cooling discharge elbow.)

Date: _____ Tech: _____

9. Open cylinder test valves and manually bar engine over one complete revolution. If fluid discharge is observed from any cylinder, find the cause, and make the necessary repairs prior to starting the engine.

Date: _____ Tech: _____

10. Check that air starting pressure is at least 110 but no more than 150 PSI at the inlet.

Date: _____ Tech: _____

11. Check fuel supply, fuel filter elements, and then prime the fuel system.

Date: _____ Tech: _____

12. Verify that **all** pressure gauges are installed as indicated with "*" on Trial Data Form.

Date: _____ Tech: _____

13. Re enable starting circuit, and start engine in accordance with instructions contained in Operator's Manual.

Date: _____ Tech: _____

INITIAL ENGINE START

After starting the engine for the first time, the following checks must be performed to ensure proper engine performance. A table of operating temperatures and pressures is provided at the end of this section for specific engine applications. *(Table C)*

1. With engine at idle speed, check engine lube oil pressure and turbo charger. If pressure is not indicated on gauge within 30 seconds, shut engine down, and determine cause. Low oil pressure may be due to low oil level in engine oil pan or to air in the lube oil system, which may be corrected by venting the system.

   Date: _____ Tech: _____

2. Check coolant level and add coolant, if necessary.

   Date: _____ Tech: _____

3. Check engine cooling system and raw water pressure indiators to verify coolant flow.

   Date: _____ Tech: _____

4. Open top deck covers and check for:
   a) Lube oil flow at all rocker arms and camshaft bearings.

   Date: _____ Tech: _____

   b) Fuel and water leaks

   Date: _____ Tech: _____

   c) Proper operation of valves, injectors and rocker arms.

   Date: _____ Tech: _____

5. Close engine top deck covers and shut down engine, using engine stop switch, after five minutes of operation.

   Date: _____ Tech: _____

6. Immediately after shutting down engine, check that the turbocharger soak back as well as the Prelube pumps are operating.

   Date: _____ Tech: _____

7. Remove the oil pan handhole covers and perform a visual and “feel over” inspection of the main, connecting rod, and piston carrier bearings. Thrust/bounce rods. Bearings that appear to be appreciably hotter than the others should be investigated to determine the cause of excessive heating.

   Date: _____ Tech: _____

8. Restart engine and repeat “feel over” inspection after 15 minutes of operation.

   Date: _____ Tech: _____

9. Restart engine and it will run at idle speed until temperature of water into the engine reaches a minimum of 120°.

   Date: _____ Tech: _____

10. Slowly increase speed until rated engine speed is obtained.

    Date: _____ Tech: _____

11. Allow engine to operate at rated RPM until engine oil and coolant temperatures stabilize.

    Date: _____ Tech: _____

12. Check fuel, coolant, and lube oil temperatures and pressures as listed in Table C. If temperatures and pressures are not within limits, check the following items:
    a) High lube oil filter pressure and/or low main lube oil pump pressure may indicate that strainer housing require cleaning.

    b) Low water pump outlet pressure or high coolant temperature may be due to plugging of temporary screen.

    c) High pressure readings in the coolant or raw water system may require enlargement of the orifice plate opening in the **applicable** system. Low pressure indications may indicate too large an opening in the orifice plate.

13. Attach water filled manometer to oil pan dipstick tube and check crankcase suction with engine at rated RPM. Manometer reading must be ½” of water minimum.

    Record: _____

    Date: _____ Tech: _____

NOTE

When making this check all top deck covers must be closed and firmly latched.

14. Remove temporary screens from coolant system.

    Date: _____ Tech: _____

15. Clean lube oil strainer housing.

Date: _____ Tech: _____

FINAL LOAD TEST

1. Prelube engine as directed in the Engine Maintenance Manual.

   Date: _____ Tech: _____

2. Fill lube oil strainer housing to overflow level. Energize immersion heater.

   Date: _____ Tech: _____

3. Open cylinder test valves and manually bar engine over one complete revolution. If fluid discharge is observed from any cylinder, find the cause, and make the necessary repairs prior to starting the engine.

   Date: Tech:

4. Check lube oil and water levels.

   Date: _____ Tech: _____

5. With the engine at full load for a sufficient time to stabilize the lube oil and water temperatures, check that the temperatures, pressures and vacuums are within the values shown in TABLE "C". Record temperatures and pressures on trial data form.

The load test duration should be aimed at bringing the engines to full load quickly as newly manufactured surfaces are conditioned for rated power operation, followed by enough time at full load to ensure that piston rings are seated sufficiently for oil control. The run also allows for detection and correction of initial material or assembly defects.

Length/duration of load test should be one (1) hour with 15 minutes at 110% load (drill rating).

ABS limits on Voltage and Frequency Variation

The DM3865E generator set must meet frequency and voltage variation requirements as outlined in section 4-3-4/3.19 and 4-34/3.21 of ABS Rules Building and Classing Mobile Offshore Drilling Units 2006.

POST TEST INSPECTION

1. Visually inspect the top decks, the air boxes, the aftercooler cores, the crankcase weld seams, the crown to of all pistons, the piston rings and the cylinder liner walls.

2. Check turbocharger for external oil leaks and for evidence of leaks in compressor section by oil at joint of air scroll and by oil coming through after cooler cores.

3. Clean lube oil strainers and replace lube oil and turbo filters.

4. Inspect interior of the turbocharger exhaust duct for evidence of interal oil leaks.

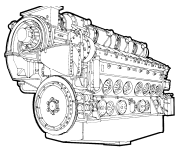

TABLE "A"

RELAY AND SWITCH SETTINGS

Data relative to pickup and dropout of the system switches follow. Disregard any listing not applicable to a particular installation.

NOTE

The switch and relay settings listed are for standard generating unit operation. Individual control options and customer supplied equipment may require changing applicable switch and relay settings. All remote monitoring equipment provided by customer must be connected at the appropriate annunciator contacts identified for customer use and not at the switches.

Relays & Switches		Pickup Value	Dropout Value
Pre-lube/Circulating Oil Pressure	**[PCOPS]**	103 kPa (15 psi)	69 kPa (10 psi)
Crankcase Pressure	**[CPS]**	EMDEC Controlled	N/A
Engine Cooling	**[EC]**		15 Minutes
Engine Temperature	**[ET1]/[ET2]**	EMDEC	N/A
Fuel Pressure Relay	**[FPR]**		60 Seconds
Air Filter Vacuum Switch	**[AFVS]**	279 mm (14")	N/A
High Oil Temperature	**[HOS1]/[HOS2]**	(230° F) / (235° F)	N/A
Low Oil Temperature	**[LTS]**	35° C (95° F)	29° C (85° F)
Low Oil Pressure	**[LOPS]**	EMDEC	EMDEC
Turbo Oil Pressure(Soakback)	**[TOS]**	103 kPa (15 psi)	69 kPa (10 psi)
Overspeed		EMDEC	EMDEC

NOTE

All settings without tolerance are nominal. For exact value see device drawing.

Air Intake Filter: Pleated Paper Element Filter Application

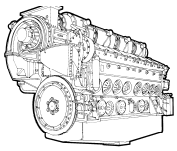

TABLE "B"

COOLING WATER & LUBE OIL SUPPLIES

(Approximate)

Type Engine		Roots Blown			Turbocharged			
Number Cylinders		**8**	**12**	**16**	**8**	**12**	**16**	**20**
Lube Oil – Engine								
Basic Pan								
Total capacity to full mark	gal.				n/a	n/a	n/a	n/a
Capacity from full to low mark	gal.				n/a	n/a	n/a	n/a
Increased capacity pan								
Total capacity to full mark	gal.				n/a	n/a	n/a	n/a
Capacity from full to low mark	gal.				n/a	n/a	n/a	n/a
Marine Pan (MD model only)								
Total capacity to full mark	gal.				n/a	n/a	n/a	175
Capacity from full to low mark	gal.				n/a	n/a	n/a	85
Lube Oil – Accessories					n/a	n/a	n/a	140
Cooling Water – Engine	gal.				n/a	n/a	n/a	165
Cooling Water – Accessories								
With 70 Gal expansion tank	gal.							137
With 110 Gal expansion tank	gal.							177

To further recommendations provided in the applicable Engine Maintenance Manuals and the Marine Drilling Unit Operating Manual, operating system temperatures and pressures should be within the following limits at engine rated load and speed. The listed temperatures are based on a unit having a 90° C (195° F) thermostatic valve.

On marine drilling units, the temperature regulator (AMOT) is designated to maintain a relatively high engine water outlet temperature to provide efficient light load combustion and subsequent reduction in engine deposits.

MODEL 710GC ENGINE SYSTEM TEMPERATURES AND PRESSURE

LUBRICATING OIL SYSTEM

Pressure range at normal operating temperature ..... 60 -100 psi
Normal operating temperature range ..... 210° - 225° F

FRESH WATER SYSTEM

Pressure rise across fresh water pump at 900 RPM..... 66 psi ± 2
Normal operating temperature range ..... 190° - 212° F

FUEL SYSTEM

At filter Inlet (from Pump) ..... 80-120 psi

EXHAUST SYSTEM

Exhaust back pressure (total system) maximum allowable..... 6 in H_2O

S&S thermostatic valve P/N is 20060324 (AMOT standard element P/N is 1096X195)

Nominal Setting	195 °F
Initial Opening	188 °F
Full Open	208 °F

Alignment Data Sheet

Customer: _____ **Date:** _____

Work Order: _____ **PO Number:** _____

Shipyard/Location: _____ **Type of Equipment:** _____

TYPE OF ALIGNMENT:

☐ Preliminary ☐ Final ☐ Other

Generator Set No. _____

Engine S/N: _____ **Gen S/N:** _____ **Gen Model:** _____

Crankshaft Thrust: _____

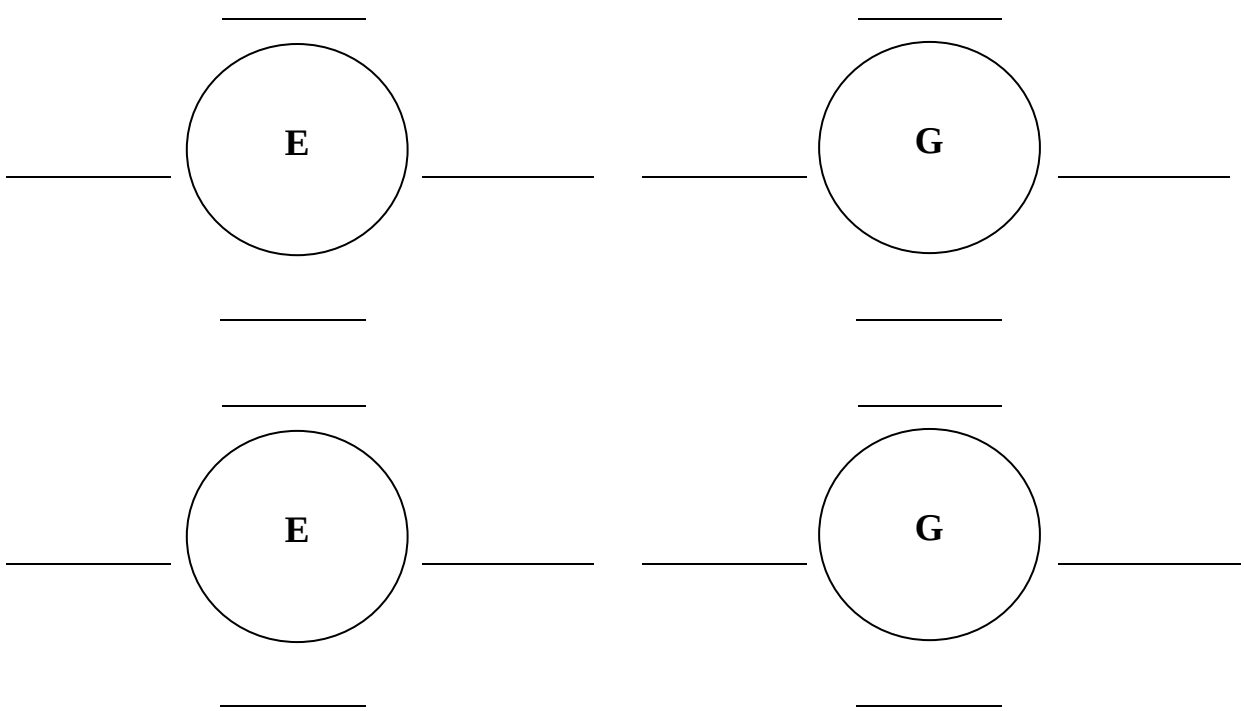

S&S Representative:

_____

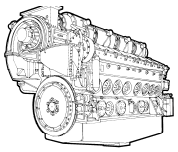

TRIAL DATA

Vessel Name _____ Order No. _____ Date _____

Owner _____ Shipyard _____

Model Engine _____ Type: Propulsion ☐ Generator ☐ Serial Nos. Const. Rot.

Vessel: Length _____ Beam _____ Draft _____ Port _____ _____ _____

Propeller: Dia. _____ Pitch _____ No. Blades _____ Center _____ _____ _____

Type of Trial: Dock ☐ Prelim. ☐ Builders ☐ Official ☐ Stbd _____ _____ _____

		SYMBOL	1	2	3	4	5	6	7	8	9
1	TIME	AM/PM									
2	ENGINE	RPM									
3	SHAFT	RPM									
4	GOVERNOR RACK SCALE	N/A									
5	ENGINE HORSEPOWER	N/A									
6	GENERATOR	VOLTS									
7	GENERATOR	AMPS									
8	GENERATOR	KW									
9	EXCITER	VOLTS									
10	EXCITER	AMPS									
11	EXCITER	KW									
12											
13											
14	FUEL OIL PRESSURE	#☐”									
15	LUBE OIL PRESSURE	#☐”									
16	FRESH WATER PRESS. L.B.	#☐”									
17	FRESH WATER PRESS. R.B.	#☐”									
18	RAW WATER PRESS.	#☐”									
19	SCAVENGING AIR PRESS.	N/A									
20	EXH. BACK PRESSURE	H_2O”									
21	BAROMETRIC PRESSURE	HG.									
22	CRANKCASE VACUUM	H_2O”									
23	FIRING PRESSURE – HIGH	#☐”									
24	FIRING PRESSURE – LOW	#☐”									
25	FIRING PRESSURE – AV.	#☐”									
26											
27											
28	AIR INLET TEMP.	°F									
29	ENGINE ROOM AIR TEMP.	°F									
30	LUBE OIL TEMP. – IN.	°F									
31	LUBE OIL TEMP. – OUT	°F									
32	FRESH WATER TEMP. – IN.	°F									
33	FRESH WATER TEMP – OUT	°F									
34	RAW WATER TEMP – IN	°F									
35	RAW WATER TEMP – OUT	°F									
36	RED. GEAR LUBE OIL TEMP.	°F									
37	EXHAUST TEMP. – HIGH	°F									
38	EXHAUST TEMP. – LOW	°F									
39	EXHAUST TEMP. – AV.	°F									
40											
41											

Observers _____

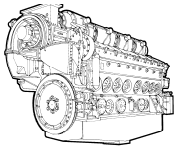

TABLE 1

SAFETY ALARM AND SHUTDOWN RECORD

No.	DESCRIPTION OF SAFETY	DESIGN TRIP SETPOINT	NORMAL OPERATING RANGE @ FULL LOAD	OBSERVED SETPOINT	ALARM	SHUTDOWN
1.	High Jacket Water Temperature (EMDEC)	[Switch]	190-212 °F		X	
2.	Low Oil Pressure (EMDEC)	[Switch]	40-100 PSIG			X
3.	High Crankcase Pressure (EMDEC)	[Switch]	0.8-1.3” H_2O			X
4.	Low Engine Coolant Level	[switch]	[switch]		X	
5.	Low Engine Oil Level	[switch]	[switch]		X	
6.	High Oil Temperature (EMDEC)	[switch]	210-225 °F		X	
7.	High Oil Temperature	220 ºF	210–225 ºF		X	
8.	Low Turbo soakback Oil Pressure	6 PSIG	8–30 PSIG		X	
9.	Low Pre Lube Oil Pressure	5 PSIG	10-20 PSIG		X	
10.	High Intake Air Filter Restriction	14” H_2O	6-10” H_2O		X	
11.	Emergency Stop	[switch]	[switch]			X
12.	Low Lube Oil Temperature	80 ºF	85-100 ºF		X	
13.	Overspeed Shutdown (ESS)	990	899-902 RPM			X
14.	Engine Overcrank (Failed to Start)	3 attempts	3 attempts		X	Lockout
15.	Intake Air Shut off Valve Tripped	[switch]	[switch]		X	Lockout
16.	Engine Mode Selector in OFF Position	[switch]	[switch]		X	
17.	Generator Lock-Out Relay Shutdown	[switch]	[switch]			X
18.	High Cylinder Temperature	1200 ºF	850–1100 ºF		X	
19.	Low Oil Pressure	37 PSIG	50–100 PSIG		X	
20.	High Jacket Water Temperature	205 ºF	190– 212 ºF		X	
21.	Low Fuel Pressure	35 PSIG	60–95 PSIG		X	
22.	Low Jacket Water Pressure (EDMEC)	[switch]	30-65 PSIG		X	
23.	High Lube Oil Filter Differential Pressure	20 PSIG	5-15 PSIG		X	

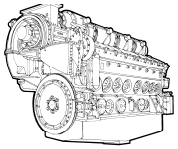

TABLE 1

SAFETY ALARM AND SHUTDOWN RECORD

…continued

No.	DESCRIPTION OF SAFETY	DESIGN TRIP SETPOINT	NORMAL OPEARING RANGE @ FULL LOAD	OBSERVED SETPOINT	ALARM	SHUTDOWN
24.	High Fuel Oil Filter Differential Pressure	10 PSIG	4-7 PSIG		X	
25.	High Engine Main Bearing Temperature	270 °F	200-260 °F		X	
26.	High Engine Main Bearing Temperature	290 °F	200-260 °F			X
27.	High Generator Stator Temperature	(159 Ω) 311 °F	290-305 °F		X	
28.	High Generator Stator Temperature	(162 Ω) 329 °F	290-305 °F			X
29.	High Generator Bearing Temperature	(133 Ω) 185 °F	160-175 °F		X	
30.	High Generator Bearing Temperature	(136 Ω) 203 °F	160-175 °F			X
31.	High Generator Air Inlet	(133 Ω) 185 °F	113-170 °F		X	
32.	Low Generator Bearing Lube Oil Pressure	14 PSIG	18-22 PSIG		X	
33.	High Generator Bearing Lube Oil Temperature	145 °F	137-140 °F		X	
34.	Generator Coolant leak	[switch]	-		X	
35.	Low Starting Air Pressure	90 PSIG	110-150 PSIG		X	
36.						
37.						
38.						
39.						
40.						
41.						
42.						
43.						
44.						
45.						
46.						

E N G I N E E R I N G D E P A R T M E N T

C A L C U L A T I O N S H E E T

TITLE: Fastener Torque Specification Table	*DATE:* 02/10/2010	*FILE:* ES-790
	PERFORMED BY: Mike Aaly	

ORIGINAL ISSUE: 02/10/2010

SUBJECT:

Calculate, and make a matrix of fasteners torque values based on type/size/condition of fasteners to be used on engine-generator set assemblies. Currently this article does not extend to “metric” fasteners.
This specification covers SAE J429 grade 5 (ASTM A449-Type1) Sizes ¼” to 1-½”, SAE J429 grade 8 sizes ¼” to 1-½” and ASTM A325-Type 1 sizes ½ to 1-½”. A side note on Bowman specific fasteners will also be included.

PRECAUTION:

No two bolts respond exactly the same to a given torque. There are numerous “real world” complications. Things such as dirt in a tapped hole, damaged threads, hole misalignment, and numerous other factors can absorb a large amount of the input torque and will result in a substantial loss in the preload which was determined. Some of the other common variables affecting the K factor may include, but is not limited to:

- Hardness of all parts
- Types of materials
- Class of fit
- Plating, thickness and type
- Surface finishes on all parts
- Manufacturing processes, such as cut or rolled thread
- Washers, present or not
- Type of tool used for tightening
- Speed of tightening
- Which is torqued, the nut or the bolt
- The number of times the fastener was used
- The type, amount, condition, method of application, contamination, and temperature of any lubricant used

> It is the responsibility of the assembly technician to confirm the grade, size, and condition of the fasteners prior to use.
>
> This could be made easier by asking Purchasing Department to get vendors’ full description and possibly recommended torque values.
>
> In any case, if in doubt about the condition, then clean, dry and lubricate the fastener with an appropriate fastener lubricant, then apply corresponding torque value.

REFERENCES:

1. Bowman “Fasteners Facts” booklet.
2. Fastenal “Mechanical Joint Design” article.
3. Fastenal “Mechanical Properties of Inch Fasteners” article.

E N G I N E E R I N G D E P A R T M E N T

C A L C U L A T I O N S H E E T

TITLE: Fastener Torque Specification Table	*DATE:* 02/10/2010	*FILE:* ES-790
	PERFORMED BY: Mike Aaly	

ORIGINAL ISSUE: 02/10/2010

DATA:

1- Torque calculation equations:

Torque = K * F * D

Where:

K = “Nut” factor, a factor that may include properties like friction, type of lubricant used, etc.

“K” can be thought of as a combination of three factors: K1, a geometric factor, K2, a thread friction related factor, and K3, an under head friction related factor.

F = Required clamping force to hold objects together, (LBS)

F = Proof Strength * 0.75 * As where As is tensile stress area of the fastener (In^2).

Proof Strength = Tensile Strength * 0.8 (PSI)

D = Nominal fastener diameter, (Inch)

2- K Factors

Bolt Condition	K value
Non-plated, black finish	0.30
Zinc-plated	0.20
Lubricated	0.15
Cadmium-plated	0.11 - 0.15

NOTE: Above values are from “Fastenal” fastener data article. There are variations to these numbers if a different article is used.

3- Physical Properties:

No.	Specification	Material	Size Range (in.)	Min. Proof Strength (psi)	Min. Tensile Strength (psi)	Min. Yield Strength (psi)	Grade Identification Marking
1	SAE J429-Grade 5 ASTM A449-Type1	Medium carbon steel quenched & tempered	¼” – 1” 1 ⅛” - 1 ½”	85,000 74,000	120,000 105,000	92,000 81,000	
2	SAE J429-Grade 8	Medium carbon steel quenched & tempered	¼” - 1 ½”	120,000	150,000	130,000	
3	ASTM A325-Type 1	Medium carbon steel quenched & tempered	½” - 1" 1 ⅛” - 1 ½”	85,000 74,000	120,000 105,000	92,000 81,000	

TITLE: Fastener Torque Specification Table	DATE: 02/10/2010	FILE: ES-790
	PERFORMED BY: Mike Aaly	

ORIGINAL ISSUE: 02/10/2010

ANALYSIS:

Proof load (clamping load) that is used to calculate torque value is normally assumed to be 75% of "proof strength" which is in turn, 80% of tensile strength. These are safety factors to prevent fastener stretch beyond its "elastic" limits.
Torque values are calculated for each fastener size and assembly conditions and tabulated in the following tables using these steps. Only selected sizes are tabulated.

Proof load (P_L) = 0.75 * Proof strength (P_S) * Tensile stress area (A_S), unit is lbs

Torque = $P_L * \frac{D}{12} * K$, (units are in-lbs and ft-lbs depending on fastener size and grade)

For ASTM A325 Type 1 sizes ½" to 1-½" (item 3 above), use tables A & B for torque values.

E N G I N E E R I N G D E P A R T M E N T

C A L C U L A T I O N S H E E T

TITLE:
Fastener Torque Specification Table

DATE:	02/10/2010	*FILE:*	ES-790
PERFORMED BY:	Mike Aaly		

ORIGINAL ISSUE: 02/10/2010

TABLE A - SAE J429-Grade 5 / ASTM A449-Type1 – Course Thread

No.	Size (In)	Tensile stress area (In^2)	Proof (clamping) Load (LBS)	Condition of fasteners	Assumed K factor	Torque Value	Units
1	¼”	0.0318	2027	Zinc plated–Dry	0.20	101	In-Lbs
				Zinc plated-Lubricated	0.15	76	
				Cadmium plated-Dry	0.10	50	
				Cadmium plated- Lubricated	0.09	45	
2	⅜”	0.0775	4941	Zinc plated–Dry	0.20	371	In-Lbs
				Zinc plated-Lubricated	0.15	278	
				Cadmium plated-Dry	0.10	185	
				Cadmium plated- Lubricated	0.09	167	
3	½”	0.1419	9046	Zinc plated–Dry	0.20	905	In-Lbs
				Zinc plated-Lubricated	0.15	678	
				Cadmium plated-Dry	0.10	452	
				Cadmium plated- Lubricated	0.09	407	
4	⅝”	0.2260	14,408	Zinc plated–Dry	0.20	150	ft-Lbs
				Zinc plated-Lubricated	0.15	113	
				Cadmium plated-Dry	0.10	75	
				Cadmium plated- Lubricated	0.09	68	
5	¾”	0.3340	21,293	Zinc plated–Dry	0.20	266	ft-Lbs
				Zinc plated-Lubricated	0.15	200	
				Cadmium plated-Dry	0.10	133	
				Cadmium plated- Lubricated	0.09	120	
6	1”	0.6060	38,632	Zinc plated–Dry	0.20	644	ft-Lbs
				Zinc plated-Lubricated	0.15	483	
				Cadmium plated-Dry	0.10	322	
				Cadmium plated- Lubricated	0.09	290	
7	1-⅛”	0.7630	42,346	Zinc plated–Dry	0.20	794	ft-Lbs
				Zinc plated-Lubricated	0.15	596	
				Cadmium plated-Dry	0.10	397	
				Cadmium plated- Lubricated	0.09	357	
8	1-¼”	0.9690	53,780	Zinc plated–Dry	0.20	1120	ft-Lbs
				Zinc plated-Lubricated	0.15	840	
				Cadmium plated-Dry	0.10	560	
				Cadmium plated- Lubricated	0.09	504	
9	1-⅜”	1.1550	64,103	Zinc plated–Dry	0.20	1469	ft-Lbs
				Zinc plated-Lubricated	0.15	1102	
				Cadmium plated-Dry	0.10	735	
				Cadmium plated- Lubricated	0.09	661	
10	1-½”	1.4050	77,978	Zinc plated–Dry	0.20	1950	ft-Lbs
				Zinc plated-Lubricated	0.15	1462	
				Cadmium plated-Dry	0.10	975	
				Cadmium plated- Lubricated	0.09	877	

E N G I N E E R I N G D E P A R T M E N T

C A L C U L A T I O N S H E E T

TITLE:
Fastener Torque Specification Table

DATE: 02/10/2010	*FILE:* ES-790
PERFORMED BY: Mike Aaly	

ORIGINAL ISSUE: 02/10/2010

TABLE B - SAE J429-Grade 5 / ASTM A449-Type1 – Fine Thread

No.	Size (In)	Tensile stress area (In^2)	Proof (clamping) Load (LBS)	Condition of fasteners	Assumed K factor	Torque Value	Units
1	¼”	0.0364	2321	Zinc plated–Dry	0.20	116	In-Lbs
				Zinc plated-Lubricated	0.15	87	
				Cadmium plated-Dry	0.10	58	
				Cadmium plated- Lubricated	0.09	52	
2	⅜”	0.0878	5597	Zinc plated–Dry	0.20	420	In-Lbs
				Zinc plated-Lubricated	0.15	315	
				Cadmium plated-Dry	0.10	210	
				Cadmium plated- Lubricated	0.09	189	
3	½”	0.1599	10,194	Zinc plated–Dry	0.20	1019	In-Lbs
				Zinc plated-Lubricated	0.15	765	
				Cadmium plated-Dry	0.10	510	
				Cadmium plated- Lubricated	0.09	459	
4	⅝”	0.2560	16,320	Zinc plated–Dry	0.20	170	ft-Lbs
				Zinc plated-Lubricated	0.15	128	
				Cadmium plated-Dry	0.10	85	
				Cadmium plated- Lubricated	0.09	77	
5	¾”	0.3730	23,779	Zinc plated–Dry	0.20	297	ft-Lbs
				Zinc plated-Lubricated	0.15	223	
				Cadmium plated-Dry	0.10	149	
				Cadmium plated- Lubricated	0.09	134	
6	1”	0.6800	43,350	Zinc plated–Dry	0.20	722	ft-Lbs
				Zinc plated-Lubricated	0.15	542	
				Cadmium plated-Dry	0.10	361	
				Cadmium plated- Lubricated	0.09	325	
7	1-⅛”	0.8560	47,508	Zinc plated–Dry	0.20	891	ft-Lbs
				Zinc plated-Lubricated	0.15	668	
				Cadmium plated-Dry	0.10	445	
				Cadmium plated- Lubricated	0.09	401	
8	1-¼”	1.0730	59,552	Zinc plated–Dry	0.20	1240	ft-Lbs
				Zinc plated-Lubricated	0.15	931	
				Cadmium plated-Dry	0.10	620	
				Cadmium plated- Lubricated	0.09	558	
9	1-⅜”	1.3150	72,983	Zinc plated–Dry	0.20	1673	ft-Lbs
				Zinc plated-Lubricated	0.15	1254	
				Cadmium plated-Dry	0.10	836	
				Cadmium plated- Lubricated	0.09	753	
10	1-½”	1.5810	87,746	Zinc plated–Dry	0.20	2194	ft-Lbs
				Zinc plated-Lubricated	0.15	1645	
				Cadmium plated-Dry	0.10	1097	
				Cadmium plated- Lubricated	0.09	987	

E N G I N E E R I N G D E P A R T M E N T

C A L C U L A T I O N S H E E T

TITLE:
Fastener Torque Specification Table

DATE:	02/10/2010	*FILE:*	ES-790
PERFORMED BY:	Mike Aaly		

ORIGINAL ISSUE: 02/10/2010

TABLE C - SAE J429-Grade 8 (ASTM A354 grade BD) – Course Thread

No.	Size (In)	Tensile stress area (In^2)	Proof (clamping) Load (LBS)	Condition of fasteners	Assumed K factor	Torque Value	Units
1	¼”	0.0318	2862	Zinc plated–Dry	0.20	143	In-Lbs
				Zinc plated-Lubricated	0.15	107	
				Cadmium plated-Dry	0.10	72	
				Cadmium plated- Lubricated	0.09	64	
2	⅜”	0.0775	6975	Zinc plated–Dry	0.20	523	In-Lbs
				Zinc plated-Lubricated	0.15	392	
				Cadmium plated-Dry	0.10	262	
				Cadmium plated- Lubricated	0.09	235	
3	½”	0.1419	12,771	Zinc plated–Dry	0.20	106	ft-Lbs
				Zinc plated-Lubricated	0.15	80	
				Cadmium plated-Dry	0.10	53	
				Cadmium plated- Lubricated	0.09	48	
4	⅝”	0.2260	20,340	Zinc plated–Dry	0.20	212	ft-Lbs
				Zinc plated-Lubricated	0.15	159	
				Cadmium plated-Dry	0.10	106	
				Cadmium plated- Lubricated	0.09	95	
5	¾”	0.3340	30,060	Zinc plated–Dry	0.20	375	ft-Lbs
				Zinc plated-Lubricated	0.15	282	
				Cadmium plated-Dry	0.10	188	
				Cadmium plated- Lubricated	0.09	169	
6	1”	0.6060	54,540	Zinc plated–Dry	0.20	909	ft-Lbs
				Zinc plated-Lubricated	0.15	682	
				Cadmium plated-Dry	0.10	455	
				Cadmium plated- Lubricated	0.09	409	
7	1-⅛”	0.7630	68,670	Zinc plated–Dry	0.20	1287	ft-Lbs
				Zinc plated-Lubricated	0.15	966	
				Cadmium plated-Dry	0.10	644	
				Cadmium plated- Lubricated	0.09	579	
8	1-¼”	0.9690	87,210	Zinc plated–Dry	0.20	1817	ft-Lbs
				Zinc plated-Lubricated	0.15	1363	
				Cadmium plated-Dry	0.10	908	
				Cadmium plated- Lubricated	0.09	818	
9	1-⅜”	1.1550	103,950	Zinc plated–Dry	0.20	2382	ft-Lbs
				Zinc plated-Lubricated	0.15	1787	
				Cadmium plated-Dry	0.10	1191	
				Cadmium plated- Lubricated	0.09	1072	
10	1-½”	1.4050	126,450	Zinc plated–Dry	0.20	3161	ft-Lbs
				Zinc plated-Lubricated	0.15	2371	
				Cadmium plated-Dry	0.10	1581	
				Cadmium plated- Lubricated	0.09	1423	

E N G I N E E R I N G D E P A R T M E N T

C A L C U L A T I O N S H E E T

TITLE:
Fastener Torque Specification Table

DATE: 02/10/2010	*FILE:* ES-790
PERFORMED BY: Mike Aaly	

ORIGINAL ISSUE: 02/10/2010

TABLE D - SAE J429-Grade 8 (ASTM A354 grade BD) – Fine Thread

No.	Size (In)	Tensile stress area (In^2)	Proof (clamping) Load (LBS)	Condition of fasteners	Assumed K factor	Torque Value	Units
1	¼”	0.0364	3276	Zinc plated–Dry	0.20	164	In-Lbs
				Zinc plated-Lubricated	0.15	123	
				Cadmium plated-Dry	0.10	82	
				Cadmium plated- Lubricated	0.09	74	
2	⅜”	0.0878	7902	Zinc plated–Dry	0.20	593	In-Lbs
				Zinc plated-Lubricated	0.15	444	
				Cadmium plated-Dry	0.10	296	
				Cadmium plated- Lubricated	0.09	267	
3	½”	0.1599	14,391	Zinc plated–Dry	0.20	120	In-Lbs
				Zinc plated-Lubricated	0.15	90	
				Cadmium plated-Dry	0.10	60	
				Cadmium plated- Lubricated	0.09	54	
4	⅝”	0.2560	23,040	Zinc plated–Dry	0.20	240	ft-Lbs
				Zinc plated-Lubricated	0.15	180	
				Cadmium plated-Dry	0.10	120	
				Cadmium plated- Lubricated	0.09	108	
5	¾”	0.3730	33,570	Zinc plated–Dry	0.20	420	ft-Lbs
				Zinc plated-Lubricated	0.15	315	
				Cadmium plated-Dry	0.10	210	
				Cadmium plated- Lubricated	0.09	189	
6	1”	0.6800	61,200	Zinc plated–Dry	0.20	1020	ft-Lbs
				Zinc plated-Lubricated	0.15	765	
				Cadmium plated-Dry	0.10	510	
				Cadmium plated- Lubricated	0.09	459	
7	1-⅛”	0.8560	77,040	Zinc plated–Dry	0.20	1445	ft-Lbs
				Zinc plated-Lubricated	0.15	1083	
				Cadmium plated-Dry	0.10	722	
				Cadmium plated- Lubricated	0.09	650	
8	1-¼”	1.0730	96,570	Zinc plated–Dry	0.20	2012	ft-Lbs
				Zinc plated-Lubricated	0.15	1509	
				Cadmium plated-Dry	0.10	1006	
				Cadmium plated- Lubricated	0.09	905	
9	1-⅜”	1.3150	118,350	Zinc plated–Dry	0.20	2712	ft-Lbs
				Zinc plated-Lubricated	0.15	2034	
				Cadmium plated-Dry	0.10	1356	
				Cadmium plated- Lubricated	0.09	1220	
10	1-½”	1.5810	142,290	Zinc plated–Dry	0.20	3557	ft-Lbs
				Zinc plated-Lubricated	0.15	2668	
				Cadmium plated-Dry	0.10	1779	
				Cadmium plated- Lubricated	0.09	1601	